EN

PIUSI®

MADE IN ITALY

LUBE PRODUCT RANGE

PRODUCT RANGE	PRODUCT CATEGORY	PRODUCT	PAGE
KITS	OIL PNEUMATIC PUMPS	OIL DRUM KIT	8
		OIL CART KIT	10
	GREASE PNEUMATIC PUMPS	GREASE CART KIT	12
	DRUM	VISCOMAT VANE DRUM	14
		VISCOMAT GEAR DRUM	16
		PICO	18
	MOBILE	VISCOTROLL VANE	20
		VISCOTROLL GEAR	22
PUMPS	PNEUMATIC PISTON PUMPS	P3.5:1:1	26
		P5.5:1	28
		P60:1 BOOSTER	30
	ELECTRIC PUMPS	VISCOMAT VANE	32
		VISCOMAT GEAR	34
		VISCO FLOWMAT	36
		VISCOMAT DC	38
		SUZZARABLUE PUMP	40
		GARDA	42
		AMALFI	44
	PNEUMATIC DIAPHRAGM PUMPS	MA 130	46
		MA 140	48
		MA 180	50
		MA 190	52
	HAND PUMPS	PIUSI HAND PUMP	54
		BARREL PUMP	56
		GREASE LEVER GUN	58
METERS	ELECTRONIC METERS	K400	66
		NEXT/2	68
		K600/3	70
		K600 B/3	72
		K600/4	74
		K200	76
		REMOTE DISPLAY	78
	MECHANICAL METERS	K40	80
		K33 / K44	82
METERED NOZZLES	METERED NOZZLES	EASY K400	88
		EASY NEXT/2	90
		K500	92
		EASY K40	94
		GREASTER	96
		K24 SUZZARABLUE / EASY K400 WINDSCREEN	98
NOZZLES	MANUAL NOZZLES	EASY OIL	104
		PISTOL-ONE	106
		EASY WINDSCREEN / PLASTIC MANUAL NOZZLE	108
WASTE OIL EQUIPMENTS	OIL DRAINERS	EASY DRAINER 80	114
		VACUDRAINER 80 / VACU 80	116
	ELECTRIC OIL DRAINERS	VACUBOX	118
		CAMBIAOLIO	120

All Pictures shown are for illustration purpose only. Actual product may vary due to product enhancement.

PRODUCT RANGE	PRODUCT CATEGORY	PRODUCT	PAGE
FILTRATION	FILTERING SYSTEMS	DEPUROIL	126
		FILTROLL	128
	FILTERS	OIL FILTERS	130
		CLEAR CAPTOR	132
FLUID MONITORING	OIL MONITORING SYSTEMS	OVERVIEW	136
		MCO 2.0	138
		MCO GO	140
	SOFTWARE	SOFTWARE MCO 2.0	142
		CLOUD SOFTWARE MCO GO	144
	COMPONENTS	CONTROL UNIT 2.0	146
		DONGLE 2.0	148
		OCIO 2.0	150
		CONTROL UNIT MCO GO	152
		EASY VIEW 2.0	154
		GPV 2.0	156
TANK MONITORING	TANK LEVEL INDICATOR	OCIO	162
HOSE REELS	OPEN HOSE REEL	OIL HOSE REEL	168
		GREASE HOSE REEL	170
		AIR/WATER HOSE REEL	172
	CLOSED HOSE REEL	OIL HOSE REEL	174
		GREASE HOSE REEL	176
		AIR/WATER HOSE REEL	178
ACCESSORIES	ACCESSORY	DUMBOX	184
MERCHANDISE	MERCHANDISE		188

LUBE

PIUSI'S
FUEL JOURNEY

THE HISTORY OF KNOW-HOW

ABOUT US

PIUSI was established in 1953 in Suzzara, in the province of Mantua (Italy). For more than 60 years, PIUSI has been the major player in the world's leading markets with its full range of products for transferring, refilling and measuring lubricants, fuels and liquids such as gasoline, diesel, Diesel Exhaust Fluid (DEF), oil, water and grease. Some of PIUSI's main products include pumps, flow meters, nozzles, dispensers, hose reels, liquid level gauges, software and complete kits used by operators in agriculture, the automotive industry, workshops and garages, fleet management and transport by road and by sea. PIUSI products have many different uses such as monitoring and transferring fuel at trucking companies, refueling of agricultural vehicles, transferring fuels in construction and mining for heavy duty vehicles. The products are intuitive and easy to use; are suitable to be installed in a variety of contexts; are all made entirely in Italy; and all products express the innovation, quality, professionalism and R&D that have always distinguished PIUSI. Its headquarters are in Suzzara (Mantova - 150 km from Milan and Venice). The company currently employs more than 250 employees between sales, administration, R&D, production and logistics. PIUSI products are sold in more than 120 countries around the world thanks to a large network of distributors and the US branch based in Fort Lauderdale, FL, serving the North and South American markets.

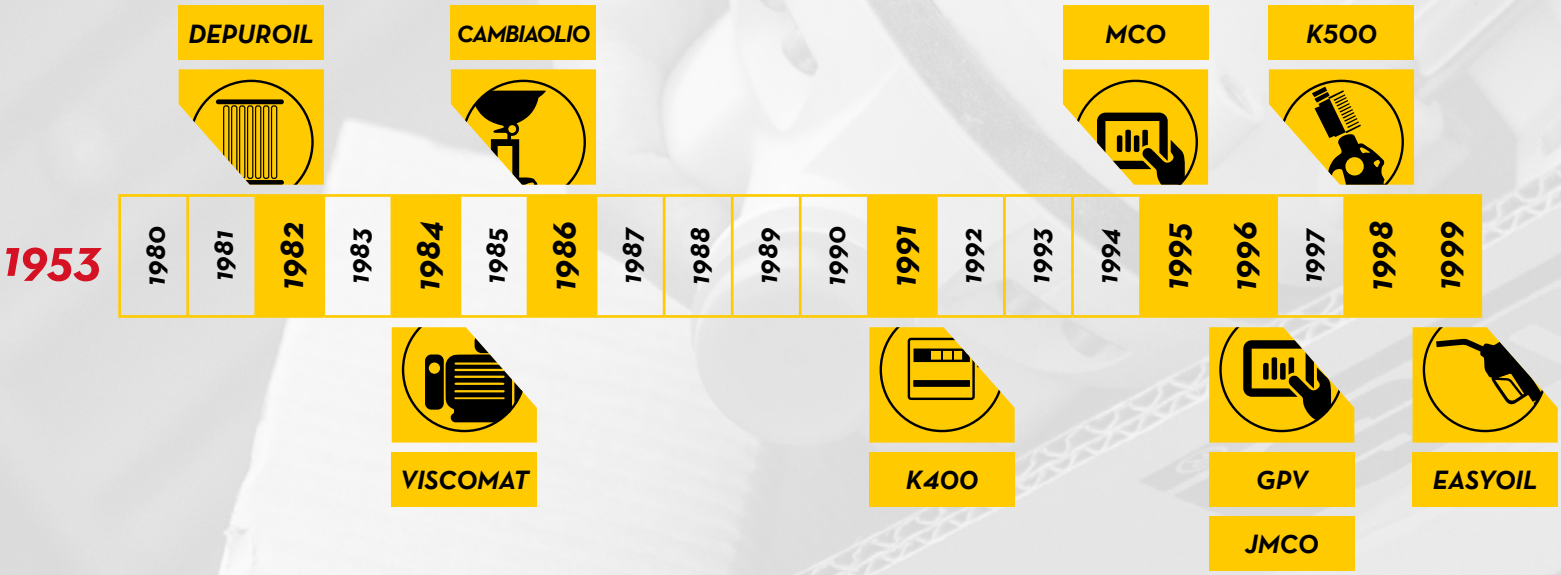

Year	Product
2000	GREASTER
2002	OCIO
2002	K200
2004	NEXT/2
2005	K40
2008	VACUBOX
2010	FILTROLL
2011	PISTOL-ONE
2013	HOSE REELS
2013	OIL DRAINERS
2015	MCO 2.0
2015	P3.5:1 P5.5:1
2016	P60:1 BOOSTER
2016	HAND PUMP
2020	MCO GO
...	

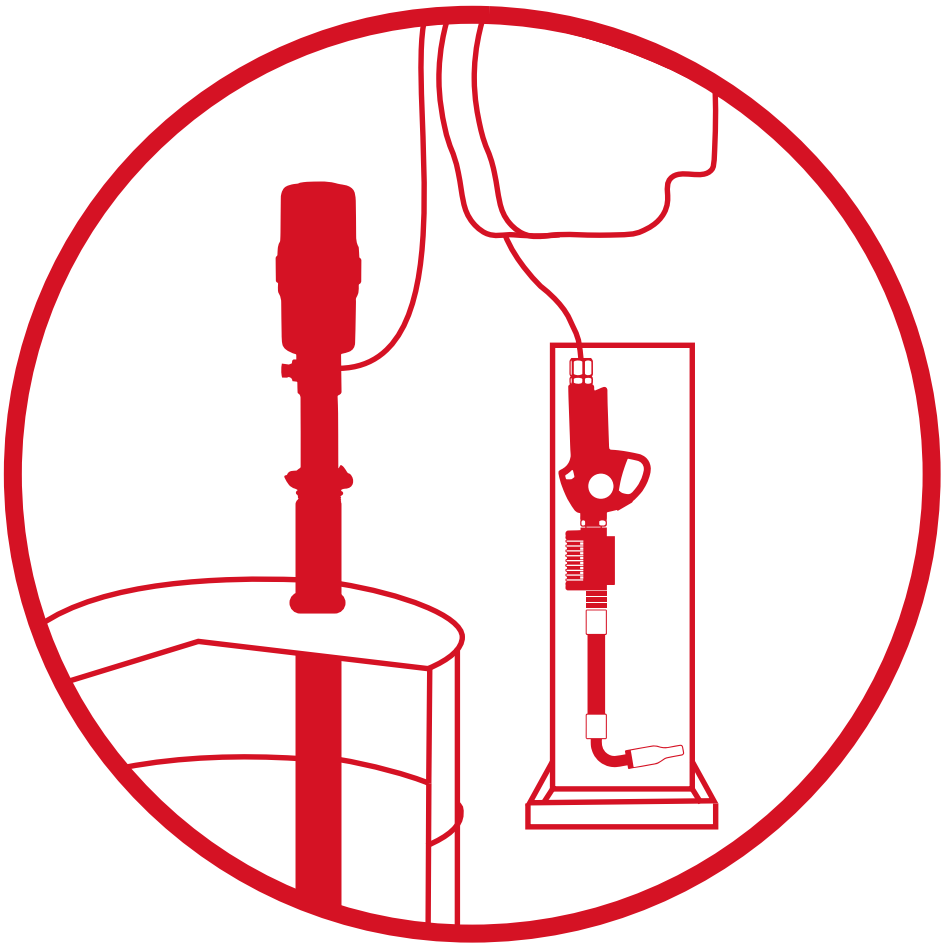

KITS

OIL DRUM KIT

FEATURES

- DOUBLE EFFECT PUMP
- HEAVY DUTY
- READY TO USE
- COMPACT DESIGN

The OIL DRUM KITS are oil dispenser units suitable to transfer medium/high viscosity lubricants. They can include P3.5:1:1 pneumatic pump, EASY K400 nozzle, Hose Reel, Drip Tray and Wall Kit.

PERFORMANCE

UP TO 21,5 L/MIN FLOW RATE	3-8 BAR OPERATING PRESSURE
± 0,5% ACCURACY	MID-HIGH VISCOSITY

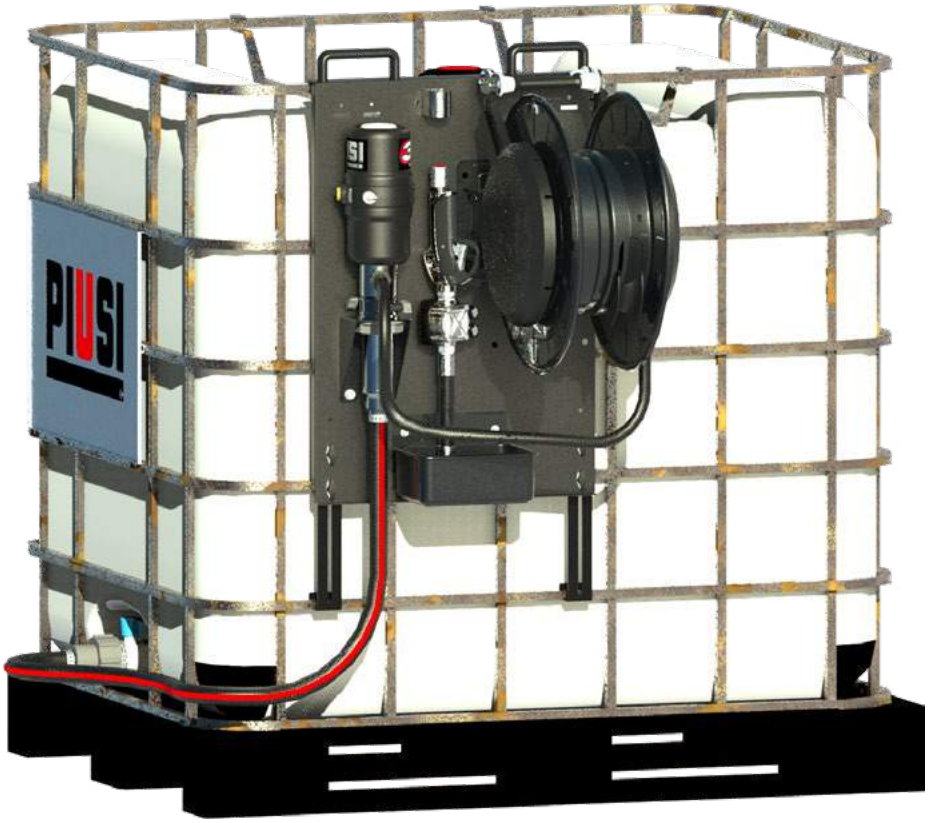

OIL IBC KITS

OIL DRUM KIT 200 3.5 W/ METER
FK0100010

OIL DRUM KIT 200 3.5 W/ METER - HR
FK0100020

OIL WALL DRUM KIT 200 3.5 W/ METER - HR
FK0100030

OIL DRUM KITS*

KIT CODE	KIT DESCRIPTION		PUMP	NOZZLE	HOSE	HOSE REEL	ACCESSORIES
FK0100000	OIL DRUM KIT 200 3.5 W/O METER	DESCRIPTION	P3.5:1 940	EASY OIL	5MT M/F 1/2" 150 BAR	-	-
		CODE	F0021402A	F0096614O	F19974000	-	-
		PAGE	30	110	-	-	-
FK0100010	OIL DRUM KIT 200 3.5 W/ METER	DESCRIPTION	P3.5:1 940	EASY K400	5MT M/F 1/2" 150 BAR	-	-
		CODE	F0021402A	F0098401O	F19974000	-	-
		PAGE	30	92	-	-	-
FK0100020	OIL DRUM KIT 200 3.5 W/ METER - HR	DESCRIPTION	P3.5:1 940	EASY K400	2MT F/F 1/2" 150 BAR	OPEN 60B W/ 1/2" 15MT OIL	-
		CODE	F0021402A	F0098401O	F19973000	HA6015120B	-
		PAGE	30	92	-	172	-
FK0100030	OIL WALL DRUM KIT 200 3.5 W/ METER - HR	DESCRIPTION	P3.5:1 ST	EASY K400	2MT F/F 1/2" 150 BAR	OPEN 60B W/ 1/2" 15MT OIL	SUCTION PIPE&WALL BRACKET
		CODE	F0021400A	F0098401O	F19973000	HA6015120B	F1997200A
		PAGE	30	92	-	172	-
FK0100040	OIL DRUM KIT 200 5.5 W/ METER	DESCRIPTION	P5.5 940	EASY K400	5MT M/F 1/2" 150 BAR	-	-
		CODE	F0021403A	F0098401O	F19974000	-	-
		PAGE	32	92	-	-	-
FK0100050	OIL DRUM KIT 200 5.5 W/ METER - HR	DESCRIPTION	P5.5 940	EASY K400	2MT F/F 1/2" 150 BAR	OPEN 60B W/ 1/2" 15MT OIL	-
		CODE	F0021403A	F0098401O	F19973000	HA6015120B	-
		PAGE	32	92	-	172	-
FK0100060	OIL WALL DRUM KIT 200 5.5 W/ METER - HR	DESCRIPTION	P5.5 ST	EASY K400	2MT F/F 1/2" 150 BAR	OPEN 60B W/ 1/2" 15MT OIL	SUCTION PIPE&WALL BRACKET
		CODE	F0021401A	F0098401O	F19973000	HA6015120B	F1997200A
		PAGE	32	92	-	172	-

OIL IBC KITS*

	PUMP		NOZZLE		HOSE	HOSE REEL	ACCESSORIES			
DESCRIPTION	P3.5:1 ST	P5.5 ST	EASY K400	EASY OIL	2MT M/M 1/2" 150 BAR	ANY	KIT MOUNT PLATE FOR IBC	KIT PIPE GUIDE + DRIP COLLECTOR/IBC	SUCTION HOSE 2MX25 M-1" BSP/F-2" NPT	TUBE HOLDER FOR METAL SHEET IBC (2 PIECES)
CODE	F0021402A	F0021401A	F0098401O	F0096614O	F22002200	-	F22002000	F02200210	F22002300	F22002400
PAGE	26	28	92	110	-	170	-	-	-	-

*THE COMPONENTS OF THE KIT ARRIVES SEPARATED IN THE PACKAGE.
UPON REQUEST IT'S AVAILABLE IN DIFFERENT KITS

OIL DRUM KIT

OIL CART KIT

FEATURES

- DOUBLE EFFECT PUMP
- MAINTENANCE FREE
- READY TO USE
- EASY TO CALIBRATE
- COMPACT DESIGN
- SUPER SILENT

The OIL CART KITS are oil dispenser units suitable to transfer medium/high viscosity lubricants. They can include P3.5:1:1 pneumatic pump, EASY K400 nozzle, Hose Reel and Cart.

PERFORMANCE

UP TO 21,5 L/MIN FLOW RATE	3-8 BAR OPERATING PRESSURE
± 0,5% ACCURACY	MID-HIGH VISCOSITY

OIL CART KIT 3.5 W/METER - HRC
FK0200030

OIL DRUM KIT 200 3.5 W/O METER
FK0200000

OIL CART KIT 3.5 W/ METER
FK0200010

OIL CART KIT 3.5 W/ METER - HR
FK0200020

OIL CART KITS*

KIT CODE	KIT DESCRIPTION		PUMP	NOZZLE	HOSE	HOSE REEL	WHEELS
FK0200000	OIL CART KIT 3.5 W/O METER	DESCRIPTION	P3.5:1 940	EASY OIL	5MT M/F 1/2" 150 BAR	-	4-WHEELS CART 180-200KG DRUMS
		CODE	F0021402A	F00966140	F19974000	-	F19966000
		PAGE	30	110	-	-	-
FK0200010	OIL CART KIT 3.5 W/ METER	DESCRIPTION	P3.5:1 940	EASY K400	5MT M/F 1/2" 150 BAR	-	4-WHEELS CART 180-200KG DRUMS
		CODE	F0021402A	F00984010	F19974000	-	F19966000
		PAGE	30	92	-	-	-
FK0200020	OIL CART KIT 3.5 W/ METER - HR	DESCRIPTION	P3.5:1 940	EASY K400	2MT F/F 1/2" 150 BAR	OPEN 60B W/ 1/2" 10MT OIL	4-WHEELS CART 180-200KG DRUMS
		CODE	F0021402A	F00984010	F19973000	HA6010120B	F19966000
		PAGE	30	92	-	172	-
FK0200030	OIL CART KIT 3.5 W/ METER - HRC	DESCRIPTION	P3.5:1 940	EASY K400	2MT F/F 1/2" 150 BAR	CLOSED 60B W/ 1/2" 12MT OIL	4-WHEELS CART 180-200KG DRUMS
		CODE	F0021402A	F00984010	F19973000	HC60121200A	F19966000
		PAGE	30	92	-	180	-

*THE COMPONENTS OF THE KIT ARRIVES SEPARATED IN THE PACKAGE.
UPON REQUEST IT'S AVAILABLE IN DIFFERENT KITS

OIL CART KIT

GREASE CART KIT

FEATURES

- DOUBLE EFFECT PUMP
- SUPER SILENT
- HEAVY DUTY
- HIGH PRESSURE

The GREASE CART KIT is a grease dispenser unit suitable to transfer high viscosity lubricants. It includes the P60:1 BOOSTER pneumatic pump, drum cover, follower plate, drum cart, swivel, hose and grease gun.

PERFORMANCE

130/160 L/MIN AIR CONSUMPTION	4-7 BAR OPERATING PRESSURE
BELOW 77 DB NOISE LEVEL	UP TO 180 KG DRUM SIZE

GREASE CART KIT 60
FK0400010

GREASE CART KIT 30
FK0400000

GREASE DRUM KIT 30
FK0300000

GREASE DRUM KIT 200 W/O FOLLOWER
FK0300030

GREASE CART KITS

KIT CODE	KIT DESCRIPTION		PUMP	GUN	HOSE	COVER	FOLLOWER PLATE	SWIVEL	CART
FK0400000	GREASE CART KIT 30	DESCRIPTION	P60:1 470	GREASE GUN RIGID HOSE	HOSE 2M 1/4" X 1/4" M/F	DRUM 18/30KG Ø320	DRUM 18/30KG Ø300	Z SWIVEL	2-WHEELS CART 12-30KG DRUMS
		CODE	F0021605A	F20605000	F2060000A	F20593000	F20594000	F2060400A	F20595000
		PAGE	34	-	-	-	-	-	-
FK0400010	GREASE CART KIT 60	DESCRIPTION	P60:1 730	GREASE GUN RIGID HOSE	HOSE 4M 1/4" X 1/4" M/F	DRUM 50/60KG Ø420	DRUM 50/60KG Ø400	Z SWIVEL	4-WHEELS CART 20-60KG DRUMS
		CODE	F0021606A	F20605000	F2060100A	F20596000	F20597000	F2060400A	F19965000
		PAGE	34	-	-	-	-	-	-

GREASE DRUM KITS

KIT CODE	KIT DESCRIPTION		PUMP	GUN	HOSE	COVER	FOLLOWER PLATE	SWIVEL	CART
FK0300000	GREASE DRUM KIT 30	DESCRIPTION	P60:1 470	GREASE GUN RIGID HOSE	HOSE 2M 1/4" X 1/4" M/F	DRUM 18/30KG Ø320	DRUM 18/30KG Ø300	Z SWIVEL	-
		CODE	F0021605A	F20605000	F2060000A	F20593000	F20594000	F2060400A	-
		PAGE	34	-	-	-	-	-	-
FK0300010	GREASE DRUM KIT 60	DESCRIPTION	P60:1 730	GREASE GUN RIGID HOSE	HOSE 4M 1/4" X 1/4" M/F	DRUM 50/60KG Ø385	DRUM 50/60KG Ø370	Z SWIVEL	-
		CODE	F0021606A	F20605000	F2060100A	F20598000	F20599000	F2060400A	-
		PAGE	34	-	-	-	-	-	-
FK0300020	GREASE DRUM KIT 200	DESCRIPTION	P60:1 940	GREASE GUN RIGID HOSE	HOSE 4M 1/4" X 1/4" M/F	DRUM 180/200KG Ø610MM	DRUM 200KG Ø590	Z SWIVEL	-
		CODE	F0021607A	F20605000	F2060100A	F20606000	F20607000	F2060400A	-
		PAGE	34	-	-	-	-	-	-
FK0300030	GREASE DRUM KIT 200 W/O FOLLOWER PLATE	DESCRIPTION	P60:1 940	GREASE GUN RIGID HOSE	HOSE 4M 1/4" X 1/4" M/F	DRUM 180/200KG Ø610MM	-	Z SWIVEL	-
		CODE	F0021607A	F20605000	F2060100A	F20606000	-	F2060400A	-
		PAGE	34	-	-	-	-	-	-

UPON REQUEST IT'S AVAILABLE IN DIFFERENT KITS

GREASE CART KIT

VISCOMAT VANE DRUM

FEATURES

- *READY TO USE*
- *LOW VISCOSITY OILS*
- *NUTATING DISC FLOW METER (K33 VERSION ONLY)*

The PIUSI VISCOMAT VANE DRUM is an oil dispenser kit suitable to transfer low viscosity lubricants. It includes AC powered PIUSI VISCOMAT PUMP, and SELF3000 manual nozzle.

PERFORMANCE

UP TO 28 L/MIN FLOW RATE	AC VOLTAGE POWER
± 1% ACCURACY	UP TO 500 cSt VISCOSITY

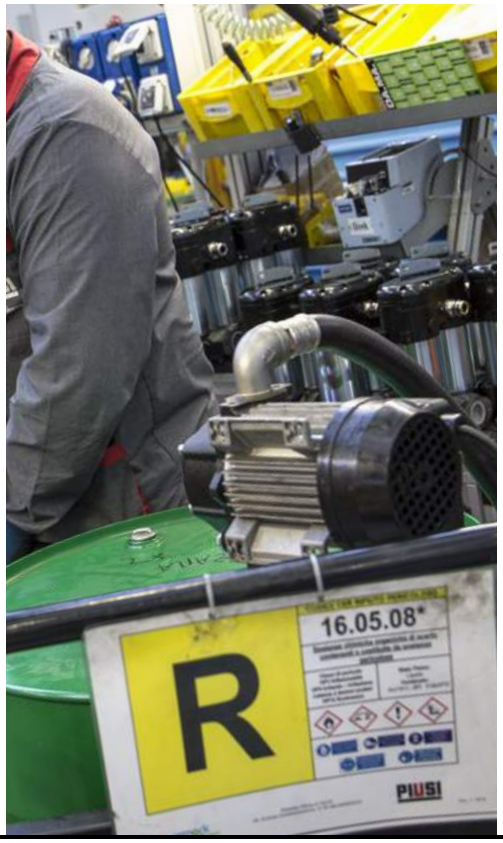

VISCOMAT VANE DRUM

PACKAGING

CODE	WEIGHT		PACKAGING			
	KG	LBS	MM	INCH	PCS/PALLET	PCS/BOX
000270000	18	39,6	480X370X265	18,9X14,6X10,4		1
000270010	21	46,3	500X380X280	19,7X15X11		1

CHART

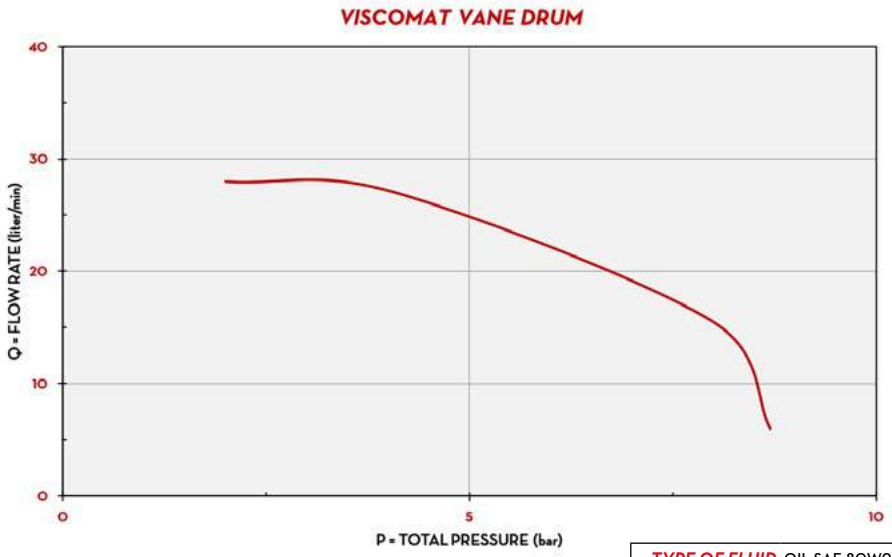

TYPE OF FLUID	OIL SAE 80W90
TEMPERATURE	17°C

IN THE BOX

- VISCOMAT VANE PUMP
- SUCTION PIPE
- K33 METER (ONLY FOR METER VERSION)
- INSTRUCTION MANUAL

DETAILS

SELF3000 MANUAL NOZZLE

K33 MECHANICAL METER

SUCTION PIPE

MATERIALS/COMPONENTS

- PUMP:
  VISCOMAT VANE PAG. 32
- NOZZLE SELF3000:
  BODY: ALLUMINIUM
  SEAL: VITON

TECHNICAL DATA

CODE	DESCRIPTION	FLUIDS TYPE	FLOW RATE		VOLTAGE			PUMP	NOZZLE	HOSE LENGTH
			L/MIN	GPM	AC V./HZ DC VOLT	POWER WATT	AMP. MAX.	MOD.	TYPE	
000270000	DRUM VISCOMAT 70M	O	28	7	230	750	4,6	VISCOMAT 70 M	SELF3000	4
000270010	DRUM VISCOMAT 70M K33	O	25	7	230	750	4,6	VISCOMAT 70 M	SELF3000	4

THE UNIT CAN ALSO BE SUPPLIED FOR OPERATING UNDER DIFFERENT VOLTAGES AND WITH METER

VISCOMAT VANE DRUM

VISCOMAT GEAR DRUM

FEATURES

- HEAVY DUTY
- EASY TO CALIBRATE (K400 ONLY)
- ERGONOMIC GRAB NOZZLE
- HIGH VISCOSITY OILS

The PIUSI VISCOMAT GEAR DRUM is an oil dispenser kit suitable to dispense medium/high viscosity lubricants. It is available in both powered by PIUSI VISCOMAT PUMP.

VISCOMAT GEAR DRUM DC

PERFORMANCE

UP TO 9 L/MIN FLOW RATE	AC/DC VOLTAGE POWER
± 0,5% ACCURACY	UP TO 2000 cSt VISCOSITY

VISCOMAT GEAR DRUM AC

PACKAGING

CODE	WEIGHT		PACKAGING			
	KG	LBS	MM	INCH	PCS/PALLET	PCS/BOX
F0026100D	18	39,6	480X370X265	18,9X14,6X10,4		1
F0026200D	18	39,6	480X370X265	18,9X14,6X10,4		1
F0026800O	9	19,8	357X357X275	14,1X14,1X10,8		1
F0026801O	9	19,8	480X370X265	18,9X14,6X10,4		1

CHART

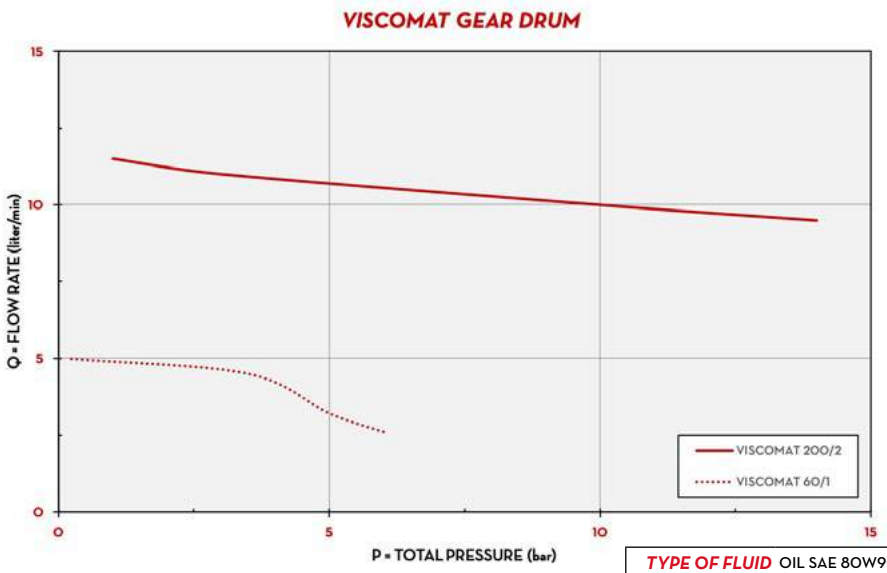

TYPE OF FLUID	OIL SAE 80W90
TEMPERATURE	20°C

IN THE BOX

- VISCOMAT PUMP
- EASY OIL/EASY K400 NOZZLE
- SUCTION HOSE
- FOOT VALVE
- INSTRUCTION MANUAL

DETAILS

ERGONOMIC NOZZLE

FOOT VALVE

ELECTRIC CABLE WITH CLAMPS (ONLY DC VERSION)

MATERIALS / COMPONENTS

- PUMP:
  - VISCOMAT GEAR — PAG. 34
  - VISCOMAT DC — PAG. 38
- NOZZLE METERS:
  - EASY K400 — PAG. 88
- NOZZLE:
  - EASY OIL — PAG. 104

TECHNICAL DATA

CODE	DESCRIPTION	FLUIDS TYPE	FLOW RATE		VOLTAGE			PUMP	NOZZLE	HOSE LENGTH
			L/MIN	GPM	AC V./HZ DC VOLT	POWER WATT	AMP. MAX.	MOD.	TYPE	
F00261000	DRUM VISCOMAT 200/2 230/50-60HZ	O	9	2	230-50/60	800/950	3,8/4,6	VISCOMAT 200/2	EASY OIL	4
F00262000	DRUM VISCOMAT 200/2 230V/50/60HZ K400	O	9	2	230-50/60	800/950	3,8/4,6	VISCOMAT 200/2	EASY K400	4
F00268000	DRUM VISCOMAT 60/1 12V	O	4	1,2	12	150	18,5	VISCOMAT 60/1	EASY OIL	4
F00268010	DRUM VISCOMAT 60/1 24V K400	O	4	1,2	24	150	18,5	VISCOMAT 60/1	EASY K400	4

THE UNIT CAN ALSO BE SUPPLIED FOR OPERATING UNDER DIFFERENT VOLTAGES AND WITH METER

VISCOMAT GEAR DRUM

PICO

FEATURES

- READY TO USE
- DRUM INSTALLATION
- TURBINE FLOW-METER (K24 VERSION ONLY)
- WEATHER PROOF MATERIALS
- STURDY DESIGN
- MULTI PURPOSE DISPENSERS

The PIUSI PICO is a dispensing unit suitable to transfer antifreeze and windscreen. It includes a centrifugal pump ready to be fitted on any kind of drum.

PERFORMANCE

UP TO 35 L/MIN	AC/DC VOLTAGE
FLOW RATE	POWER
± 1%	
ACCURACY	

PICO 12 K24 METER

PACKAGING

CODE	WEIGHT		PACKAGING			
	KG	LBS	MM	INCH	PCS/PALLET	PCS/BOX
WITH METER						
F00202020	4,8	10,6	360X360X180	14,2X14,2X7,1		1
F00202060	4,8	10,6	360X360X180	14,2X14,2X7,1		1
F00202100	4,8	10,6	360X360X180	14,2X14,2X7,1		1
WITHOUT METER						
F00202000	4,5	9,9	360X360X180	14,2X14,2X7,1		1
F00202040	4,5	9,9	360X360X180	14,2X14,2X7,1		1
F00202080	4,5	9,9	360X360X180	14,2X14,2X7,1		1

CHART

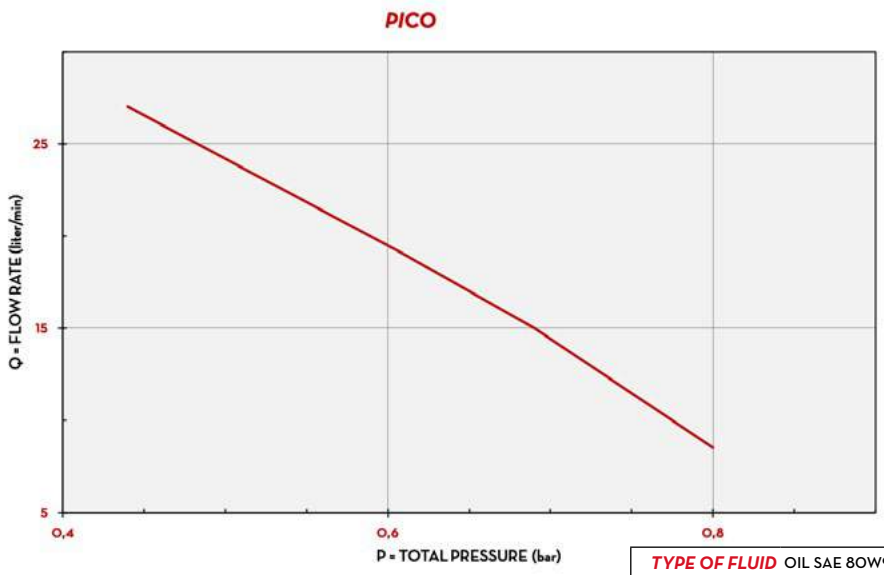

TYPE OF FLUID	OIL SAE 80W90
TEMPERATURE	24°C

IN THE BOX

- PICO PUMP
- K24 METER (METER VERSION OLNY)
- INSTRUCTION MANUAL

DETAILS

MANUAL NOZZLE

ON/OFF SWITCH

ELECTRIC CABLE WITH CLAMPS

K24 METER

DIMENSIONS

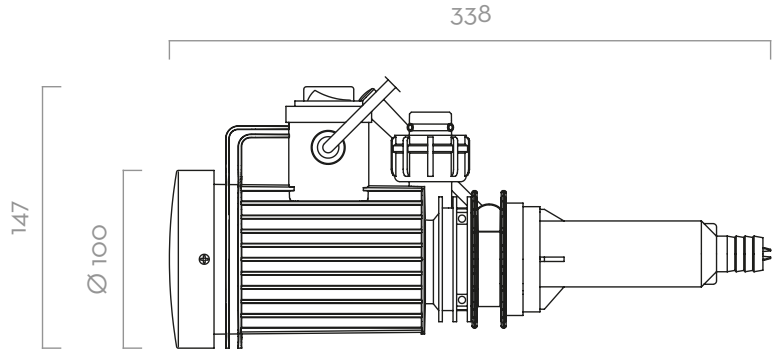

Dimensions expressed in millimeters

MATERIALS/COMPONENTS

- METER, K24:
  BODY: ALLUMINIUM
  GEARS: TECHNOPOLYMER
- MANUAL NOZZLE:
  BODY: ALLUMINIUM
  SEAL: VITON
- PUMP:
  BODY: TECHNOPOLYMER
  TURBINES: TECHNOPOLYMER

TECHNICAL DATA

CODE	DESCRIPTION	FLUIDS TYPE	METER	FLOW RATE L/MIN	FLOW RATE GPM	AC VOLT	DC VOLT	DUTY CICLE	ON/OFF SWITCH	CABLES	NOZZLE	INLET/ OUTLET
WITH METER												
F00202020	PICO230 K24 M	D A	K24	35	9	230/50	-	-	YES	YES	MAN.	-
F00202060	PICO12 K24	D A	K24	30	8	-	12	30	YES	YES	MAN.	-
F00202100	PICO24 K24 M	D A	K24	30	8	-	24	30	YES	YES	MAN.	-
WITHOUT METER												
F00202000	PICO230 M	D A	-	35	8	230/50	-	-	YES	YES	MAN.	-
F00202040	PICO12 M	D A	-	30	8	-	12	30	YES	YES	MAN.	-
F00202080	PICO24 M	D A	-	30	8	-	24	30	YES	YES	MAN.	-

VISCOTROLL VANE

FEATURES

- HIGH CAPACITY PUMP
- READY TO USE
- NUTATING DISC FLOW METER (K33 ONLY)
- STURDY DESIGN CART

The PIUSI VISCOTROLL VANE is a mobile oil dispenser suitable to transfer low viscosity lubricants. This versatile mobile cart includes the AC powered PIUSI VISCOMAT PUMP, and SELF3000 manual nozzle.

PERFORMANCE

UP TO 25 L/MIN FLOW RATE	BELOW 70 DB NOISE LEVEL
± 1% ACCURACY	UP TO 500 cSt VISCOSITY

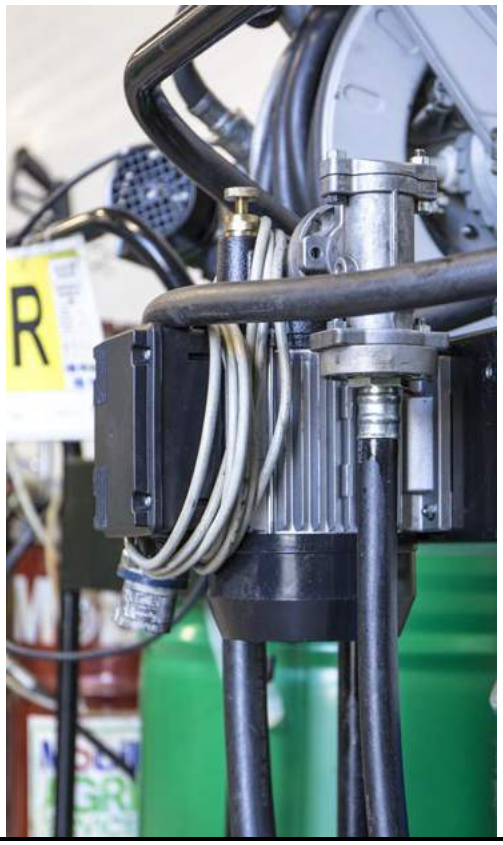

VISCOTROLL VANE

PACKAGING

CODE	WEIGHT		PACKAGING			
	KG	LBS	MM	INCH	PCS/PALLET	PCS/BOX
VISCOTROLL VANE						
000263100	34	75	1090X690X300	42,9X27,2X11,8		1
000263110	36	79,4	1090X690X300	42,9X27,2X11,8		1

CHART

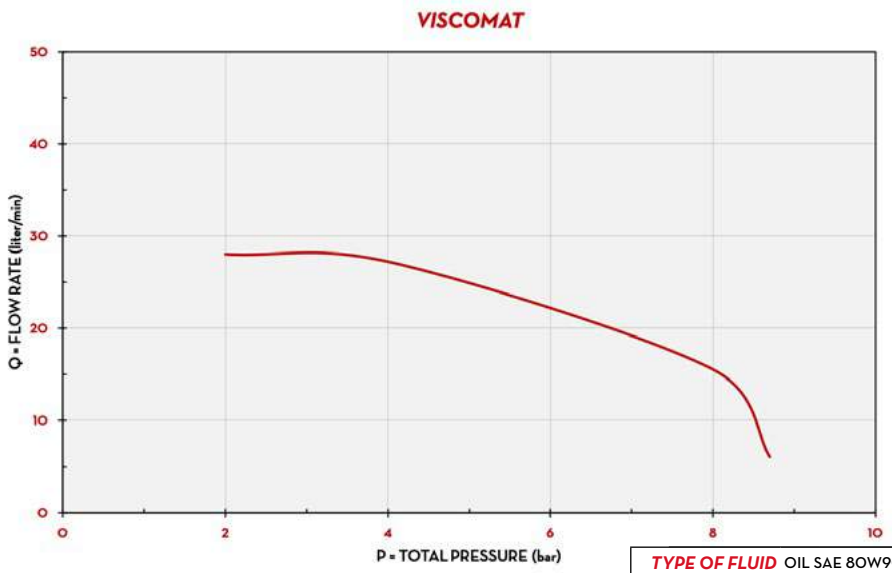

TYPE OF FLUID	OIL SAE 80W90
TEMPERATURE	17°C

IN THE BOX

- VISCOMAT PUMP
- FOOT VALVE
- SELF3000 NOZZLE
- CART
- INSTRUCTION MANUAL

DETAILS

SELF3000 MANUAL NOZZLE

ON/OFF SWITCH

FOOT VALVE

DIMENSIONS

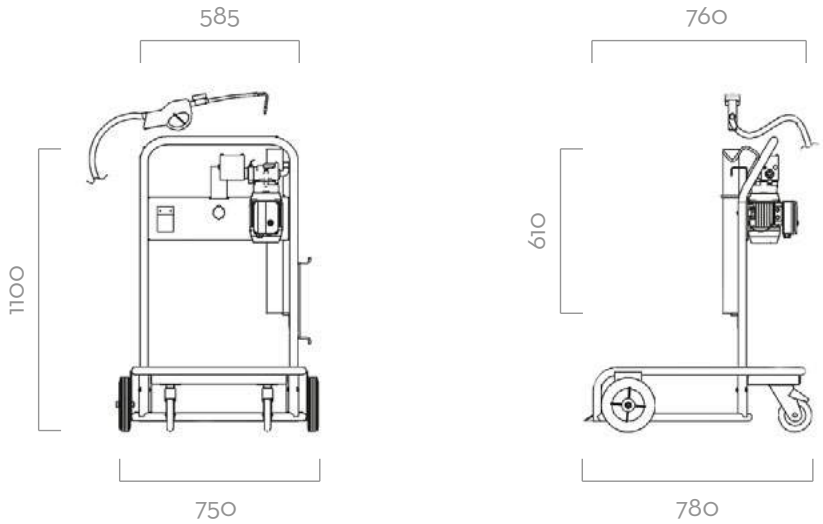

Dimensions expressed in millimeters

MATERIALS/COMPONENTS

- PUMP:
  VISCOMAT VANE PAG. 32
- METERS:
  K33 PAG. 82
- NOZZLE SELF3000:
  BODY: ALLUMINIUM
  SEAL: VITON

TECHNICAL DATA

CODE	DESCRIPTION	FLUIDS TYPE	FLOW RATE		VISCOSITY	VOLTAGE			METER	PUMP	NOZZLE
			L/MIN	GPM	CST MAX.	AC V./HZ DC VOLT	POWER WATT	AMP. MAX.	MOD.	MOD.	TYPE
VISCOTROLL VANE											
000263100	VISCOTROLL 70	O	25	6,6	500	230/50	750	4,6	-	VISCOMAT 70M	SELF3000
000263110	VISCOTROLL 70/K33	O	25	6,6	500	230/50	750	4,6	K33	VISCOMAT 70M	SELF3000

UPON REQUEST IT IS AVAILABLE WITH DIFFERENT VOLTAGE AND FREQUENCY

VISCOTROLL VANE

VISCOTROLL GEAR

FEATURES

- ON DEMAND FLOW
- ADJUSTABLE BYPASS
- SUPER SILENT
- READY TO USE
- OVAL GEAR METER
- STURDY DESIGN CART

The PIUSI VISCOTROLL GEAR is a mobile oil dispenser suitable to dispense medium/high viscosity lubricants. This versatile mobile cart is available in AC/DC version both powered by PIUSI VISCOMAT PUMP.

PERFORMANCE

UP TO 9 L/MIN — FLOW RATE	BELOW 65 DB — NOISE LEVEL
± 0,5% — ACCURACY	UP TO 2000 cSt — VISCOSITY

VISCOTROLL GEAR AC

VISCOTROLL GEAR DC

PACKAGING

CODE	WEIGHT		PACKAGING			
	KG	LBS	MM	INCH	PCS/PALLET	PCS/BOX
VISCOTROLL DC 120/1						
F0026320O	57	125,7	1090X690X320	42,9X27,2X12,6		1
F0026321O	58	125,9	1090X690X320	42,9X27,2X12,6		1
VISCOTROLL AC 200						
F0026300D	34	75	1090X690X300	42,9X27,2X11,8		1
F0026301D	35	77	1090X690X300	42,9X27,2X11,8		1
F0026302D	36	79,4	1090X690X300	42,9X27,2X11,8		1
F0026303D	37	81,6	1090X690X300	42,9X27,2X11,8		1

CHART

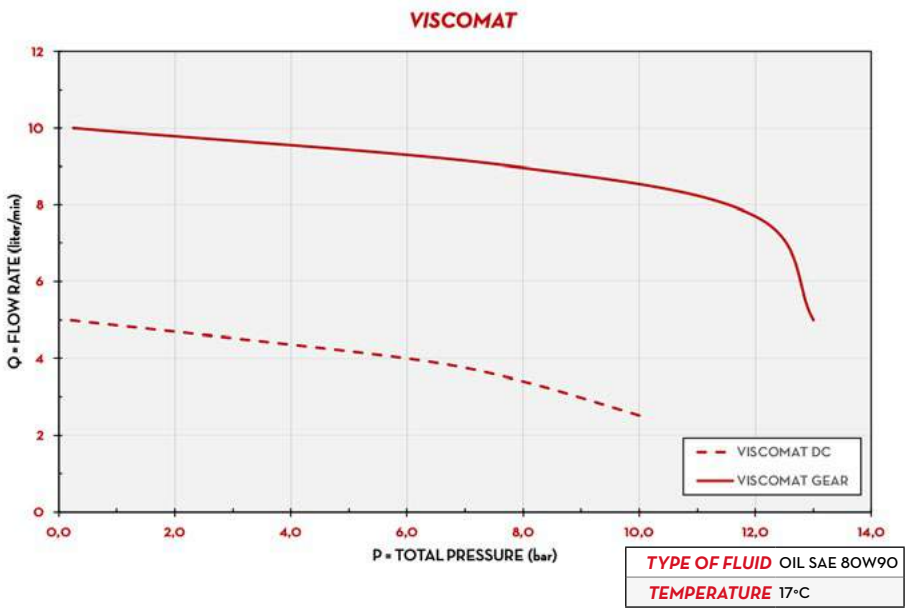

TYPE OF FLUID	OIL SAE 80W90
TEMPERATURE	17°C

IN THE BOX

- VISCOMAT PUMP
- INLINE VALVE
- EASY OIL / EASY K400 NOZZLE
- BATTERY CHARGER (ONLY DC VERSION)
- CART
- FOOT VALVE
- SWIVEL PROTECTION (VISCOTROLL 200 MODELS)
- INSTRUCTION MANUAL

DETAILS

GEAR PUMP

PRESSURE SWITCH

BATTERY CHARGER

DIMENSIONS

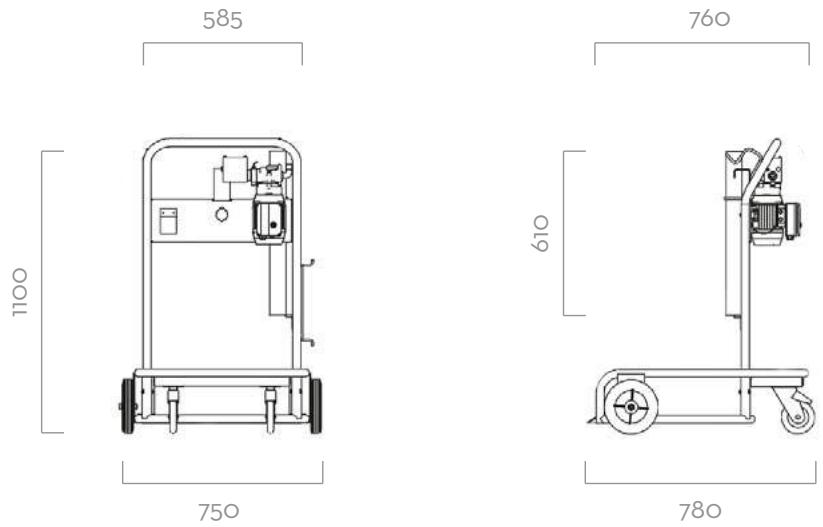

Dimensions expressed in millimeters

COMPONENTS

- PUMP:
  - VISCOMAT GEAR — PAG. 34
  - VISCOMAT DC — PAG. 38
  - VISCO FLOWMAT — PAG. 36
- NOZZLE METERS:
  - EASY K400 — PAG. 88
- NOZZLE:
  - EASY OIL — PAG. 104

TECHNICAL DATA

CODE	DESCRIPTION	FLUIDS TYPE	FLOW RATE L/MIN	FLOW RATE GPM	VISCOSITY CST MAX.	VOLTAGE AC V./HZ DC VOLT	VOLTAGE POWER WATT	VOLTAGE AMP. MAX.	METER MOD.	PUMP MOD.	NOZZLE TYPE	PRESSURE SWITCH	BATTERY CHARGER VOLT
VISCOTROLL DC 120/1													
F00263200	VISCOTROLL 120/1 DC PST.	O	6	1,6	2000	12	360	30	-	VISCOMAT 120/1 DC	EASY OIL	YES	230
F00263210	VISCOTROLL 120/1 DC PST.K 400	O	6	1,6	2000	12	360	30	K400	VISCOMAT 120/1 DC	EASY K400	YES	230
VISCOTROLL AC 200													
F00263000	VISCOTROLL 200/2 AC	O	9	2,4	2000	230/50	800	3,8	-	VISCOMAT GEAR 200/2	EASY OIL	YES	-
F00263010	VISCOTROLL 200/2 AC - K400	O	9	2,4	2000	230/50	800	3,8	K400	VISCOMAT GEAR 200/2	EASY K400	YES	-
F00263020	VISCOTROLL 200/2 AC - PST	O	9	2,4	2000	230/50	800	3,8	-	VISCO-FLOWMAT 200/2	EASY OIL	YES	-
F00263030	VISCOTROLL 200/2 AC - PST - K400	O	9	2,4	2000	230/50	800	3,8	K400	VISCO-FLOWMAT 200/2	EASY K400	YES	-

PUMPS

P3.5:1:1

FEATURES

- DOUBLE EFFECT
- LOW OPERATIONAL SPEED
- DURABILITY
- MAINTENANCE FREE
- 20% MORE POWERFUL COMPARED TO THE MARKET STANDARD
- COMPOSITE MATERIAL BODY
- NO OXIDATION/PARTICLES PROOF
- METAL FREE DIFFUSER

The PIUSI P3.5:1:1 is an oil piston pump, suitable for transferring medium viscosity oil over short distances. It is manufactured using selected materials to ensure high performance and durability.

PERFORMANCE

UP TO 21,5 L/MIN FLOW RATE	MID-HIGH VISCOSITY
3-8 BAR AIR PRESSURE	BELOW 77 DB NOISE LEVEL*

PIUSI P3.5:1 ST

PIUSI P3.5:1 940

PACKAGING

CODE	WEIGHT		PACKAGING			
	KG	LBS	MM	INCH	PCS/PALLET	PCS/BOX
PIUSI 3.5 ST						
F0021400A	3,5	7,7	495X125X130	19,5X4,9X5,1	-	1
PIUSI 3.5 940						
F0021402A	5,5	12,1	1250X125X130	43,2X4,9X5,1	-	1

CHART

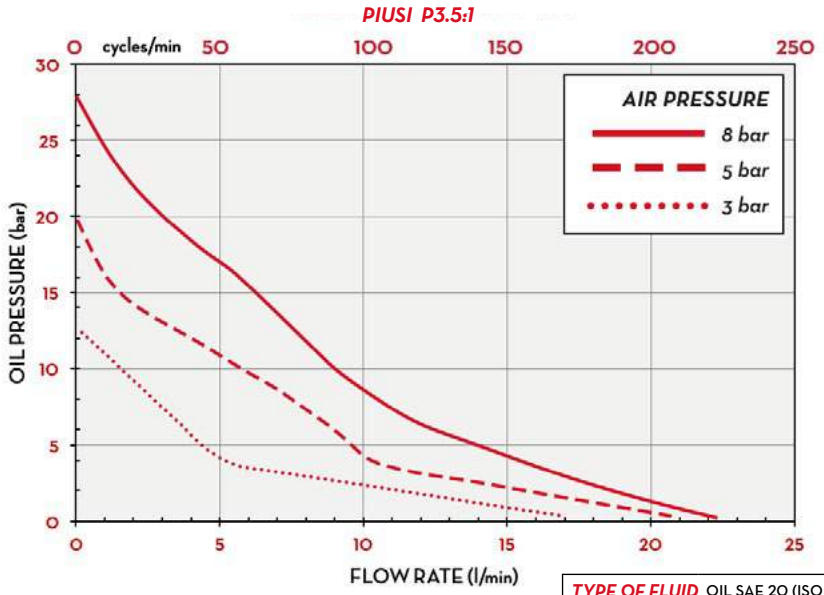

TYPE OF FLUID	OIL SAE 20 (ISO VG68)
TEMPERATURE	18 °C

IN THE BOX

- PIUSI P3.5:1 ST / 940 PUMP
- BANG ADAPTER
- INSTRUCTION MANUAL

DETAILS

BANG ADAPTER

HEAVY DUTY BODY

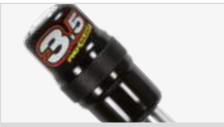
INDUSTRIAL DESIGN

PRESSURE REGULATOR

DIMENSIONS

PIUSI P3.5:1 ST

MEASURE "A"	445MM
MEASURE "B"	175MM
WEIGHT	4,5KG

PIUSI P3.5:1 940

MEASURE "A"	1210MM
MEASURE "B"	940MM
WEIGHT	5,5KG

PIUSI P3.5:1 ST

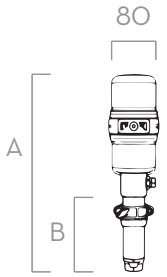

PIUSI P3.5:1 940

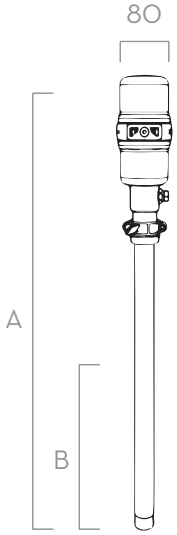

Dimensions expressed in millimeters

MATERIALS

- AIR MOTOR: TECHNOPOLYMER
- BODY: DIE CAST STEEL
- SEAL: NBR

TECHNICAL DATA

CODE	DESCRIPTION	FLUIDS TYPE	FLOW RATE		COMPRESSION RATIO	WORKING PRESSURE		AIR CONSUMPTION	SUCTION PIPE		INLET	OIL SIDE CONNECTION		POLYURETHANE SEALS
			L/MIN	GPM		BAR	PSI	L/MIN	MM	LENGHT MM	BSP	SUCTION BSP	OUTLET BSP	BSP
PIUSI 3.5 ST														
F0021400A	PIUSI P3.5:1 ST	O	21,5	5,7	3.5:1	3-8	43,5-116	200-250	50	175	F.1/4"	F.1"	M.1/2"	YES
PIUSI 3.5 940														
F0021402A	PIUSI P3.5:1 940	O	21,5	5,7	3.5:1	3-8	43,5-116	200-250	50	940	F.1/4"	F.1"	M.1/2"	YES

*MEASURING MADE WITH PUMP ASSEMBLED OVER DRUM TAKEN FROM 1 METER DISTANCE WITHOUT ANY ENVIROMENTAL NOISES.

P5.5:1

FEATURES

- DOUBLE EFFECT
- LOW OPERATIONAL SPEED
- DURABILITY
- MAINTENANCE FREE
- 12% MORE POWERFUL COMPARED TO THE MARKET STANDARD
- COMPOSITE MATERIAL BODY
- NO OXIDATION/PARTICLES PROOF
- METAL FREE DIFFUSER

The PIUSI P5.5:1 is an oil piston pump, suitable for transferring medium viscosity oil over medium distances. It is manufactured using selected materials to ensure high performance and durability.

PERFORMANCE

UP TO 15,5 L/MIN FLOW RATE	BELOW 77 DB NIOSE LEVEL*
3-8 BAR AIR PRESSURE	MID-HIGH VISCOSITY

PIUSI P5.5:1 ST

PIUSI P5.5:1 940

PACKAGING

CODE	WEIGHT		PACKAGING			
	KG	LBS	MM	INCH	PCS/PALLET	PCS/BOX
PIUSI 5.5 ST						
F0021401A	5,5	7,7	495X125X130	19,5X4,9X5,1	-	1
PIUSI 5.5 940						
F0021403A	5,5	12,1	1250X125X130	43,2X4,9X5,1	-	1

CHART

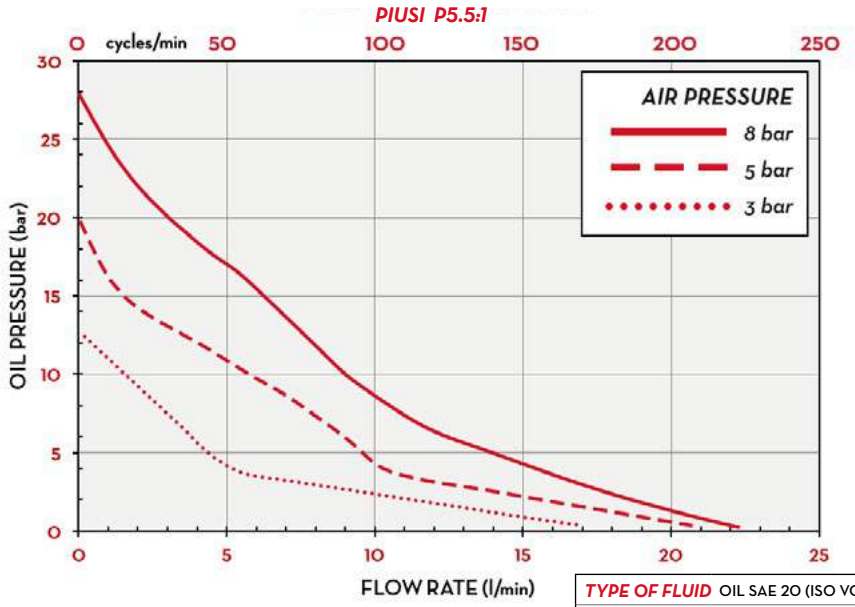

TYPE OF FLUID	OIL SAE 20 (ISO VG68)
TEMPERATURE	18 °C

IN THE BOX

- PIUSI P5.5 ST / 940 PUMP
- BANG ADAPTER
- INSTRUCTION MANUAL

DETAILS

BANG ADAPTER

HEAVY DUTY BODY

INDUSTRIAL DESIGN

PRESSURE REGULATOR

DIMENSIONS

PIUSI P5.5:1 ST

MEASURE "A"	445MM
MEASURE "B"	175MM
WEIGHT	3,5KG

PIUSI P5.5:1 940

MEASURE "A"	1210MM
MEASURE "B"	940MM
WEIGHT	5,5KG

PIUSI P5.5:1 ST

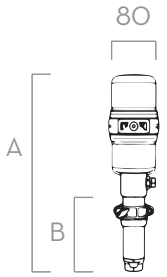

PIUSI P5.5:1 940

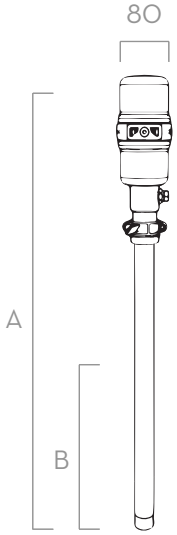

Dimensions expressed in millimeters

MATERIALS

- AIR MOTOR: TECHNOPOLYMER
- BODY: DIE CAST STEEL
- SEAL: NBR

TECHNICAL DATA

CODE	DESCRIPTION	FLUIDS TYPE	FLOW RATE		COMPRESSION RATIO	WORKING PRESSURE		AIR CONSUMPTION	SUCTION PIPE		INLET	OIL SIDE CONNECTION		POLYURETHANE SEALS
			L/MIN	GPM		BAR	PSI	L/MIN	MM	LENGHT MM	BSP	SUCTION BSP	OUTLET BSP	BSP
PIUSI 5.5 ST														
F0021401A	PIUSI P5.5 ST	O	15,5	4,1	5.5:1	3-8	43,5-116	200-250	42	175	F.1/4"	F.1"	M.1/2"	YES
PIUSI 5.5 940														
F0021403A	PIUSI P5.5 940	O	15,5	4,1	5.5:1	3-8	43,5-116	200-250	42	940	F.1/4"	F.1"	M.1/2"	YES

*MEASURING MADE WITH PUMP ASSEMBLED OVER DRUM TAKEN FROM 1 METER DISTANCE WITHOUT ANY ENVIROMENTAL NOISES.

P60:1 BOOSTER

FEATURES

- DOUBLE EFFECT
- DURABILITY
- MAINTENANCE FREE
- SUPER SILENT
- COMPOSITE MATERIAL BODY
- NO OXIDATION
- PARTICLES PROOF
- METAL FREE DIFFUSER

The PIUSI 60:1 BOOSTER is an industrial piston pump suitable for transferring grease and thick oil at high pressure, over both short and long distances, thanks to the high compression ratio.

PERFORMANCE

130/160 L/MIN AIR CONSUMPTION	BELOW 77 DB NIOSE LEVEL*
4-7 BAR AIR PRESSURE	UP TO 180 KG DRUM SIZE

PIUSI P60:1 470 PIUSI P60:1 730

PIUSI P60:1 940

PACKAGING

CODE	WEIGHT		PACKAGING			
	KG	LBS	MM	INCH	PCS/PALLET	PCS/BOX
PIUSI P60:1 BOOSTER						
F0021605A	3,8	8,4	495X125X130	19,5X4,9X5,1	-	1
F0021606A	5	7,7	1035X125X130	40,7X4,9X5,1	-	1
F0021607A	5,8	12,1	1250X125X130	43,2X4,9X5,1	-	1

CHART

PIUSI P60:1 BOOSTER

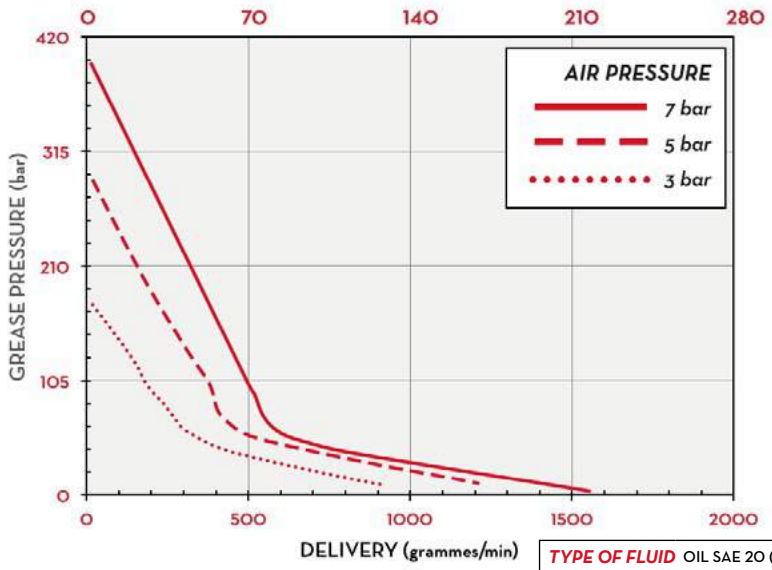

TYPE OF FLUID	OIL SAE 20 (ISO VG68)
TEMPERATURE	18 °C

IN THE BOX

- P60:1 BOOSTER PUMP
- INSTRUCTION MANUAL

DETAILS

STURDY STRUCTURE

HEAVY DUTY BODY

INDUSTRIAL DESIGN

PRESSURE REGULATOR

MATERIALS

- AIR MOTOR: TECHNO POLYMER
- BODY: DIE CAST STEEL
- SEAL: NBR

DIMENSIONS

PIUSI P60:1 - 470

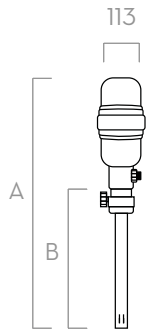

PIUSI P60:1 - 730

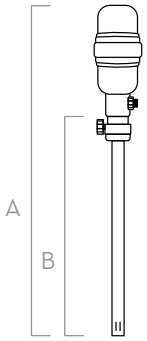

PIUSI P60:1 - 940

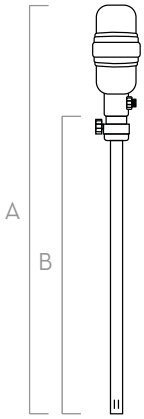

PIUSI P60:1 470

MEASURE "A"	740MM
MEASURE "B"	470MM

PIUSI P60:1 730

MEASURE "A"	1000MM
MEASURE "B"	730MM

PIUSI P60:1 940

MEASURE "A"	1210MM
MEASURE "B"	940MM

Dimensions expressed in millimeters

TECHNICAL DATA

CODE	DESCRIPTION	FLUIDS TYPE	DRUM-SIZE KG		SUCTION PIPE Ø MM	SUCTION PIPE LENGHT MM	COMPRESSION RATIO	WORKING PRESSURE BAR	WORKING PRESSURE PSI	AIR CONSUMPTION L/MIN	AIR INLET CONNECTION BSP	GREASE SIDE CONNECTION OUTLET BSP	POLYURETHANE SEALS BSP
PIUSI P60:1 BOOSTER													
F00216 05A	PIUSI P60:1 470	G	18	30	30	470	60:1	4-7	58-116	130-160	F.1/4"	M.1/4"	YES
F00216 06A	PIUSI P60:1 730	G	50	60	30	730	60:1	4-7	58-116	130-160	F.1/4"	M.1/4"	YES
F00216 07A	PIUSI P60:1 940	G	180	200	30	940	60:1	4-7	58-116	130-160	F.1/4"	M.1/4"	YES

*MEASURING MADE WITH PUMP ASSEMBLED OVER DRUM TAKEN FROM 1 METER DISTANCE WITHOUT ANY ENVIROMENTAL NOISES.

P60:1 BOOSTER

VISCOMAT VANE

FEATURES

- ADJUSTABLE BYPASS
- MULTI-PURPOSE PUMP
- SUITABLE TO TRANSFER WASTE OILS

The PIUSI VISCOMAT VANE is an electric vane pump suitable for transferring low viscosity fluids. The pump is equipped with a built-in adjustable bypass.

PERFORMANCE

UP TO 50 L/MIN FLOW RATE	UP TO 500 CST VISCOSITY
BELOW 77 DB NOISE LEVEL*	AC VOLTAGE POWER

VISCOMAT VANE

PACKAGING

CODE	WEIGHT		PACKAGING			
	KG	LBS	MM	INCH	PCS/PALLET	PCS/BOX
VISCOMAT 70						
F0033490A	14,15	31,1	355X185X285	-	60	72	1
F0033190A	14,15	31,1	350X200X280	-	60	72	1
VISCOMAT 90						
F00303M00	14,15	31,1	350X200X280	-	60	72	1
000303000	14,15	31,1	350X200X280	-	60	72	1

CHART

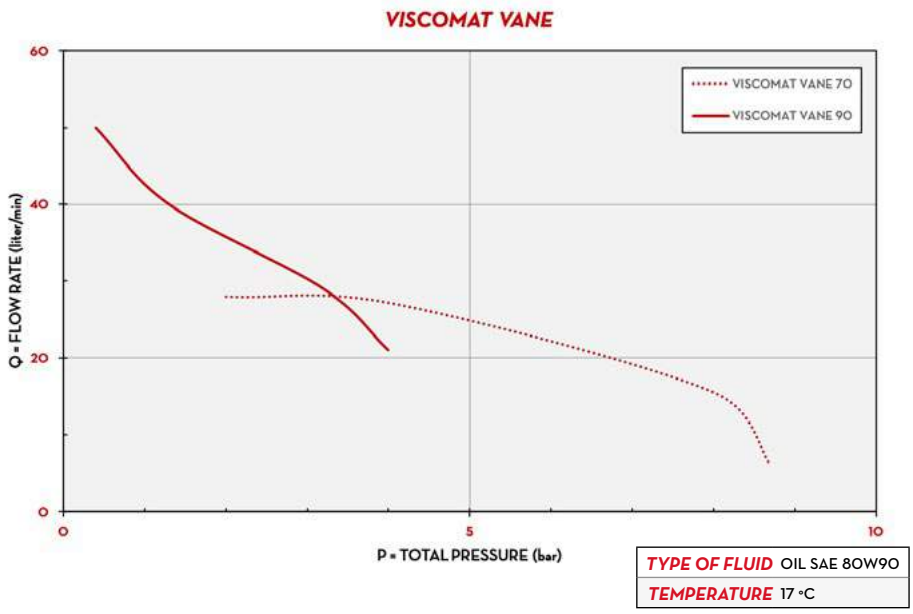

TYPE OF FLUID	OIL SAE 80W90
TEMPERATURE	17 °C

IN THE BOX

- VISCOMAT VANE PUMP
- INSTRUCTION MANUAL

DETAILS

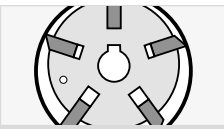
VANE ROTORS

ON/OFF SWITCH

ADJUSTABLE BYPASS

DIMENSIONS

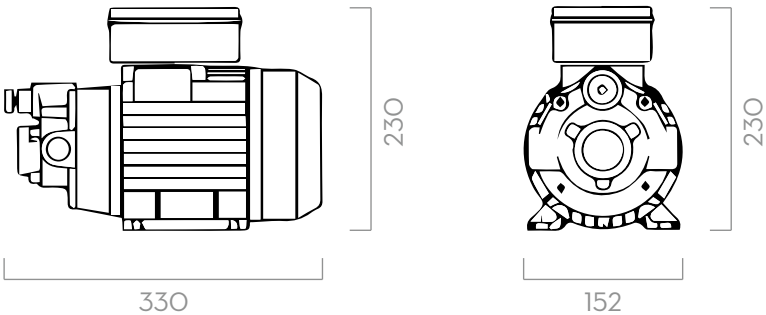

MATERIALS

- BODY: CAST IRON
- ROTOR: SINTERED STEEL
- VANES: TECHNOPOLYMER
- SHAFT: STEEL

Dimensions expressed in millimeters

TECHNICAL DATA

CODE	DESCRIPTION	FLUIDS TYPE	FLOW RATE		WORKING PRESSURE		VOLTAGE				RPM	INLET OUTLET BSP	BYPASS VALVE
			L/MIN	GPM	BAR	PSI	SINGLEPHASE MOTOR V./HZ	THREEPHASE MOTOR V./HZ	POWER WATT	AMP. MAX			
VISCOMAT 70													
F0033490A	VISCOMAT 70 M. 230/50/60	O D	25	7	6	85	230/50/60	-	1200/1000	5,5-5,1	1470/1650	1" BSP	YES
F0033190A	VISCOMAT 70 T. 400/50/60	O D	25	7	6	85	-	400/50 - 460/60	650/1000	2,2/3,1	1470/1750	1" BSP	YES
VISCOMAT 90													
F00303M00	VISCOMAT 90 M. 230/50/60*	O D	50	13	5	71	230/50/60	-	1350/1600	6,2/4,9	1400/1600	1" BSP	NO
000303000	VISCOMAT 90 T. 400/50	O D	50	13	5	71	-	400/50	2000	5	1450	1" BSP	YES

UPON REQUEST IT IS AVAILABLE WITH DIFFERENT VOLTAGE AND FREQUENCY - (*) WITHOUT ADJUSTABLE BYPASS VALVE

VISCOMAT GEAR

FEATURES

- STURDY STRUCTURE
- INDUCTION THERMAL-PROTECTED MOTOR
- OVERLOAD PROTECTION
- IP 55

The PIUSI VISCOMAT GEAR is an electric gear pump suitable for transferring high viscosity oils. The built-in adjustable bypass allows to regulate the delivery pressure.

VISCOMAT GEAR

PERFORMANCE

UP TO 14 L/MIN FLOW RATE	12-25 BAR AIR PRESSURE
BELOW 77 DB NOISE LEVEL**	UP TO 2000 CST VISCOSITY

PACKAGING

CODE	WEIGHT		PACKAGING			
	KG	LBS	MM	INCH	PCS/PALLET	PCS/BOX
F0030403D	9	19,8	350X200X280	13,8X7,9X11		1
F0030430D	12,5	27,6	350X200X280	13,8X7,9X11		1
F0030401D	12,5	27,6	350X200X280	13,8X7,9X11		1
F0030405D	9	19,8	350X200X280	13,8X7,9X11		1
F00304T1D	12,5	27,6	350X200X280	13,8X7,9X11		1
F00304T4D	12,5	27,6	350X200X280	13,8X7,9X11		1

CHART

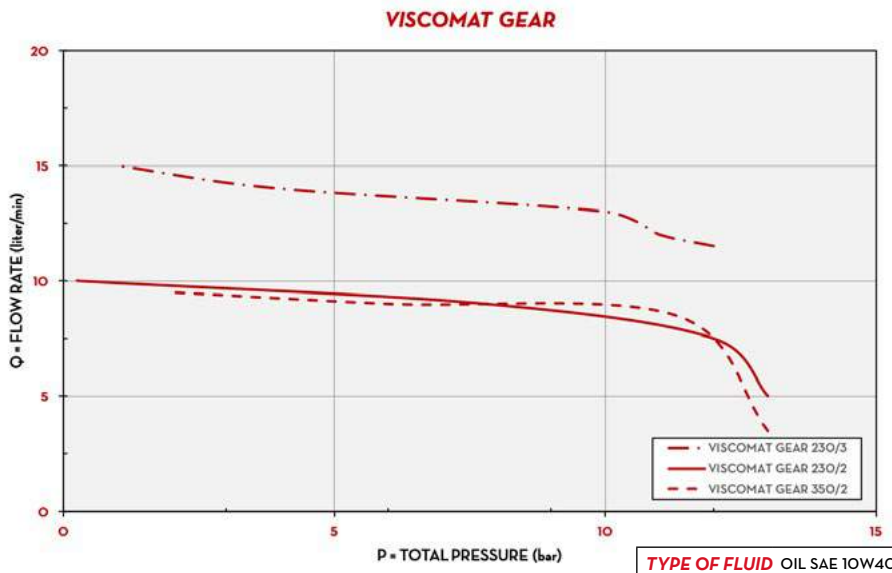

TYPE OF FLUID	OIL SAE 10W40
TEMPERATURE	19 °C

IN THE BOX

- VISCOMAT GEAR PUMP
- ANTI-SIPHON
- INSTRUCTION MANUAL

DETAILS

ON/OFF SWITCH

ADJUSTABLE BYPASS

DIMENSIONS

VISCOMAT GEAR 200/2

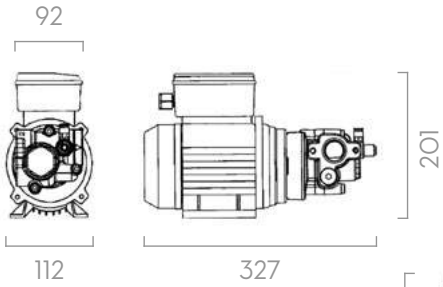

VISCOMAT GEAR 230/3
VISCOMAT GEAR 350/2

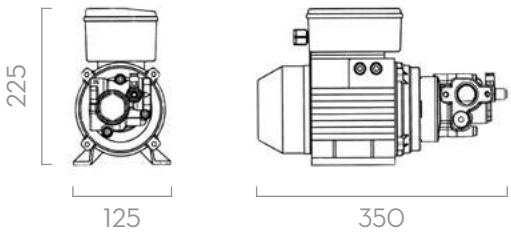

Dimensions expressed in millimeters

MATERIALS

- BODY: CAST IRON
- GEARS: SINTERED STEEL
- SHAFT: STEEL
- BYPASS: BRASS

TECHNICAL DATA

CODE	DESCRIPTION	FLUIDS TYPE	FLOW RATE		WORKING PRESSURE		VOLTAGE			RPM	INLET OUTLET BSP	BYPASS VALVE
			L/MIN	GPM	BAR	PSI	MOTOR V./ HZ	POWER WATT	AMP. MAX.			
F0030403D	VISCOMAT 200/2 M. SINGLE-PHASE	O	9	2,4	12	170	230/50/60	800/950	3,8/4,6	1450/1700	1" BSP	YES
F0030430D	VISCOMAT 230/3 M. SINGLE-PHASE	O	14	3,7	16	227	230/50	1250	6	1400	1" BSP	YES
F0030401D	VISCOMAT 350/2 M. SINGLE-PHASE	O	9	2,4	25	355	230/50	1200	6	1250	1" BSP	YES
F0030405D	VISCOMAT 200/2 THREE-PHASE	O	9	2,4	12	170	400/50	550	1,5	1450	1" BSP	YES
F00304T1D	VISCOMAT 350/2 THREE-PHASE	O	9	2,4	25	355	400/50	750	2,5	1450	1" BSP	YES
F00304T4D	VISCOMAT 230/3 THREE-PHASE	O	14	3,7	12	170	400/50	1200	2,7	1400	1" BSP	YES

UPON REQUEST IT IS AVAILABLE WITH DIFFERENT VOLTAGE AND FREQUENCY - (*) WITHOUT ADJUSTABLE BYPASS VALVE - (**) MEASURING MADE WITH PUMP ASSEMBLED OVER DRUM TAKEN FROM 1 METER DISTANCE WITHOUT ANY ENVIROMENTAL NOISES.

VISCOFLOWMAT

FEATURES

- ON DEMAND FLOW
- ELECTRONIC PRESSUR SWITCH
- BUILT-IN SECURITY VALVE
- HIGH PRESSURE

The PIUSI VISCOFLOWMAT is an electric gear pump suitable for transferring high viscosity oils. This self-priming pump is equipped with a pressure switch that features an automatic pump switch-off at the end of the delivery.

PERFORMANCE

UP TO 14 L/MIN FLOW RATE	12-25 BAR PRESSURE
BELOW 70 DB NOISE LEVEL*	UP TO 2000 CST VISCOSITY

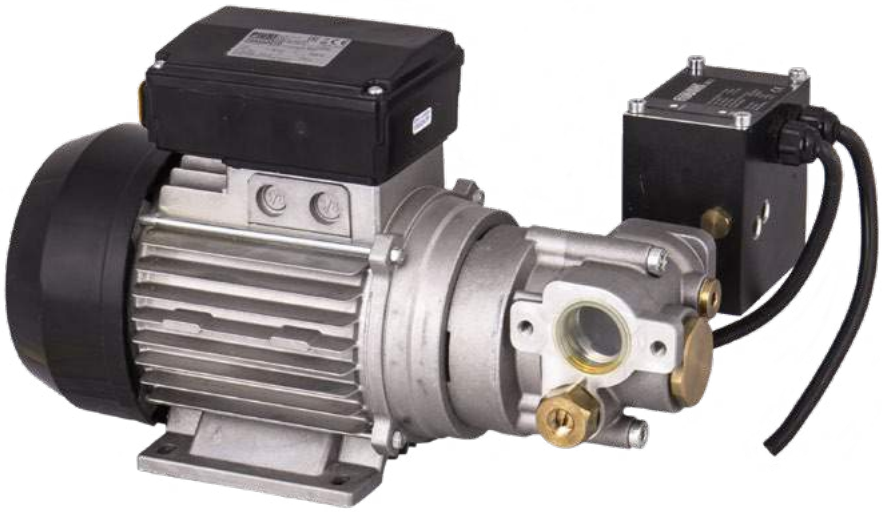

VISCOFLOWMAT

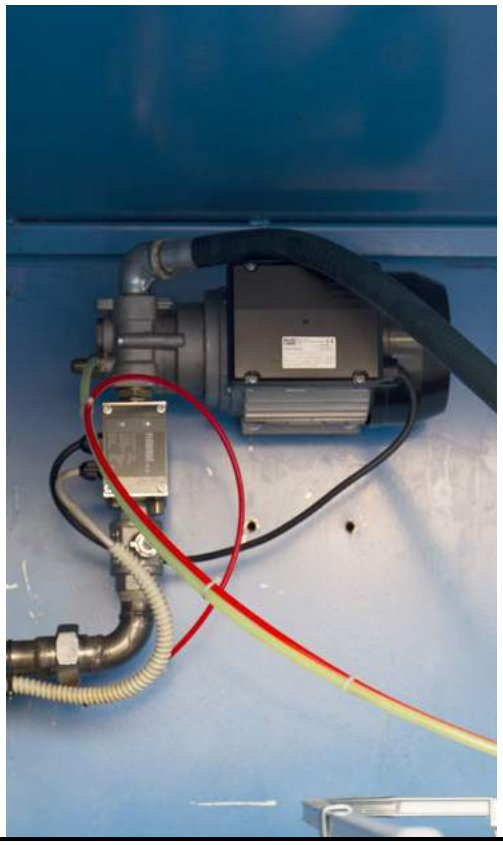

PACKAGING

CODE	WEIGHT		PACKAGING			
	KG	LBS	MM	INCH	PCS/PALLET	PCS/BOX
F0030200D	12	26,5	360X360X300	14,2X14,2X11,8		1
F0030204D	15	33,1	360X360X300	14,2X14,2X11,8		1
F0030206D	15	33,1	360X360X300	14,2X14,2X11,8		1

CHART

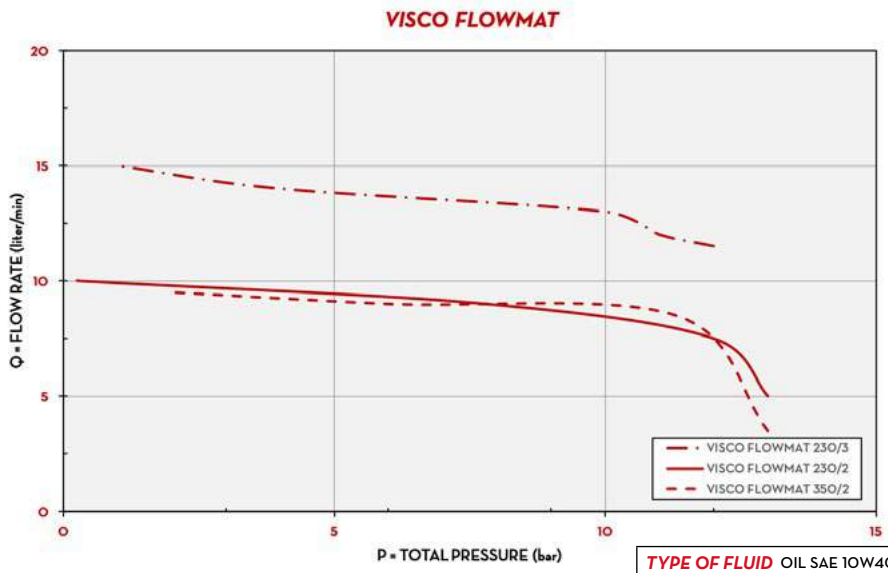

TYPE OF FLUID	OIL SAE 10W40
TEMPERATURE	20 °C

IN THE BOX

- VISCOMAT GEAR PUMP
- ANTI-SIPHON KIT
- KIT FLOWMAT
- INSTRUCTION MANUAL

DETAILS

ON/OFF SWITCH

ADJUSTABLE BYPASS

PRESSURE SWITCH

DIMENSIONS

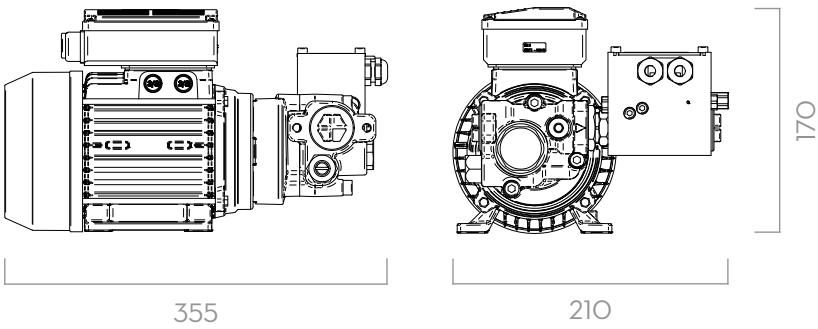

Dimensions expressed in millimeters

MATERIALS

- BODY: CAST IRON
- GEARS: SINTERED STEEL
- SHAFT: STEEL
- BYPASS: BRASS

TECHNICAL DATA

CODE	DESCRIPTION	FLUIDS TYPE	FLOW RATE		WORKING PRESSURE		VOLTAGE			RPM	INLET OUTLET BSP	BYPASS VALVE
			L/MIN	GPM	BAR	PSI	MOTOR V./ HZ	POWER WATT	AMP. MAX.			
F0030200D	VISCO FLOWMAT 200/2	O	9	2,4	12	170	230-50/60	800	3,8	1450	1" BSP	YES
F0030204D	VISCO FLOWMAT 230/3	O	14	3,7	16	227	230-50/60	1200	6	1450	1" BSP	YES
F0030206D	VISCO FLOWMAT 350/2	O	9	2,4	25	355	230-50/60	1250	6	1450	1" BSP	YES

*MEASURING MADE WITH PUMP ASSEMBLED OVER DRUM TAKEN FROM 1 METER DISTANCE WITHOUT ANY ENVIROMENTAL NOISES.

VISCOMAT DC

FEATURES

- BUILT-IN BYPASS
- SMALL SIZE
- EASY TO FIT
- MULTI-PURPOSE PUMP

VISCOMAT DC is oil transfer pump suitable for workshops with demanding work paces. Designed for applications where it is necessary to transfer oil from drums, where there is no connection to the power line or compressed air system, VISCOMAT DC can be applied to drums, IBC tanks or installed in kits for oil transfer like DRUM VISCOMAT.

PERFORMANCE

UP TO 10 L/MIN — FLOW RATE	UP TO 10 BAR — PRESSURE
BELOW 65 DB — NOISE LEVEL**	UP TO 2000 CST — VISCOSITY

VISCOMAT DC

PACKAGING

CODE	WEIGHT		PACKAGING			
	KG	LBS	MM	INCH	PCS/PALLET	PCS/BOX
F0030902A	3	6,6	200X120X140	7,9X4,7X5,5		1
F0030901A	4,9	10,8	345X175X255	13,6X6,9X10		1
F0030900A	4,9	10,8	345X175X255	13,6X6,9X10		1
F0031002A	3	6,6	200X120X140	7,9X4,7X5,5		1
F0031001A	4,9	10,8	345X175X255	13,6X6,9X10		1
F0031000A	4,9	10,8	345X175X255	13,6X6,9X10		1
F0031100O	4,9	10,8	345X175X255	13,6X6,9X10		1
F0031101O	4,9	10,8	345X175X255	13,6X6,9X10		1

CHART

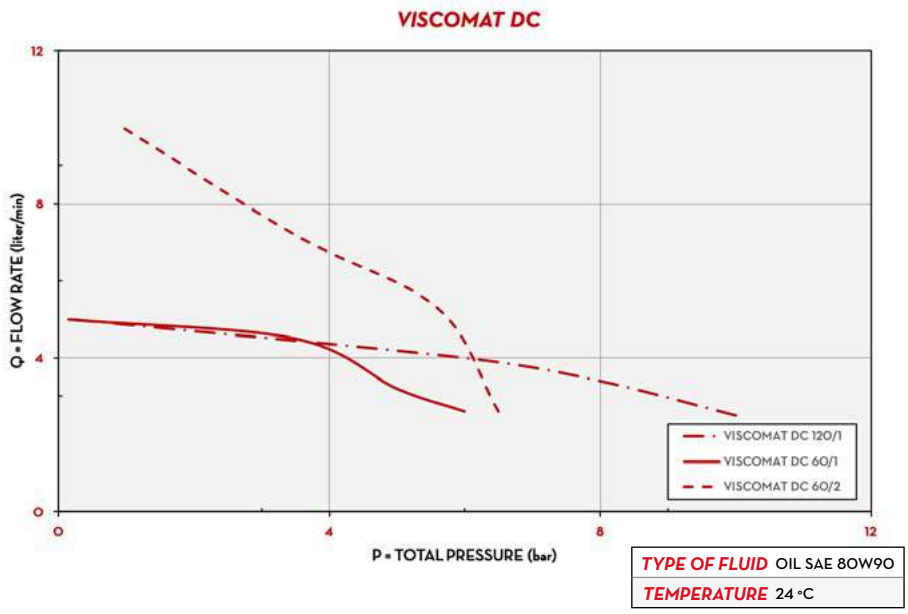

TYPE OF FLUID	OIL SAE 80W90
TEMPERATURE	24 °C

IN THE BOX

- VISCOMAT DC PUMP
- INSTRUCTION MANUAL

DETAILS

ON/OFF SWITCH

GEAR ROTOR

DIMENSIONS

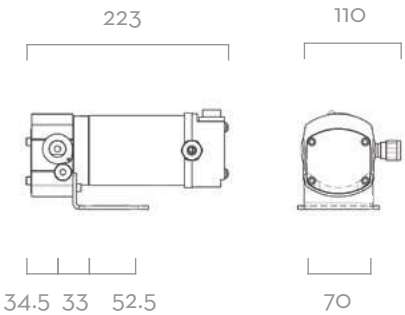

VISCOMAT DC 60/1

VISCOMAT DC 60/2

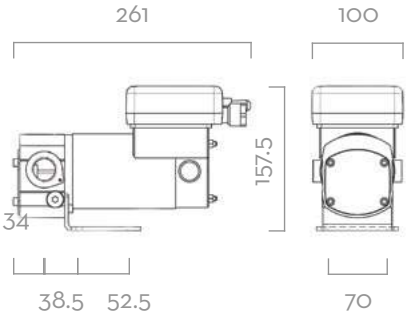

Dimensions expressed in millimeters

MATERIALS

- BODY: CAST IRON
- GEARS: SINTERED STEEL
- SHAFT: STEEL
- BYPASS: BRASS

TECHNICAL DATA

CODE	DESCRIPTION	FLUIDS TYPE	FLOW RATE		WORKING PRESSURE		VOLTAGE			RPM	INLET OUTLET BSP	PRESSURE SWITCH
			L/MIN	GPM	BAR	PSI	MOTOR V./ HZ	POWER WATT	AMP. MAX.			
F0030902A	VISCOMAT 60/1 12V DC	O	4	1,2	5	70	12	150	18,5	2900	1/2" BSP	NO
F0030901A	VISCOMAT 60/2 12V DC (*)	O	10	2,8	4	57	12	300	35	2900	3/4" BSP	NO
F0030900A	VISCOMAT 120/1 12V DC	O	5	1,4	10	140	12	200	26,5	2900	1/2" BSP	NO
F0031002A	VISCOMAT 60/1 24V DC	O	4	1,2	5	70	24	150	9,5	2900	1/2" BSP	NO
F0031001A	VISCOMAT 60/2 24V DC (*)	O	10	2,8	4	57	24	300	18	2900	3/4" BSP	NO
F0031000A	VISCOMAT 120/1 24V DC	O	5	1,4	10	140	24	200	19,5	2900	1/2" BSP	NO
F00311000	VISCOMAT 120/1 12V PST	O	5	1,4	10	140	12	200	22,5	2900	1/2" BSP	YES
F00311010	VISCOMAT 120/1 24V PST	O	5	1,4	10	140	24	200	19,5	2900	1/2" BSP	YES

(*) FOR VISCOMAT DC 60/2 MAX OIL VISCOSITY 600 CST - (**) MEASURING MADE WITH PUMP ASSEMBLED OVER DRUM TAKEN FROM 1 METER DISTANCE WITHOUT ANY ENVIROMENTAL NOISES.

SUZZARABLUE PUMP

FEATURES

- TECHNOPOLYMER DIAPHRAGM
- READY TO USE
- MULTI-PURPOSE PUMP
- SELF PRIMING
- BUILT-IN BYPASS VALVE

The PIUSI SUZZARABLUE is the best seller diaphragm pump in this market. Available in AC/DC version this self-priming pump can be used to transfer urea/AdBlue® fluids.

SUZZARABLUE AC

PERFORMANCE

UP TO 35 L/MIN	AC/DC VOLTAGE
FLOW RATE	POWER
20 MIN	
DUTY CYCLE	

SUZZARABLUE DC

PACKAGING

CODE	WEIGHT		PACKAGING			
	KG	LBS	MM	INCH	PCS/PALLET	PCS/BOX
F00203090	7	15,4	350X180X280	13,8X7,1X11		1
F00204080	3,6	7,9	350X180X280	1	60	84
F00204090	3,6	7,9	350X180X280	1	60	84

CHART

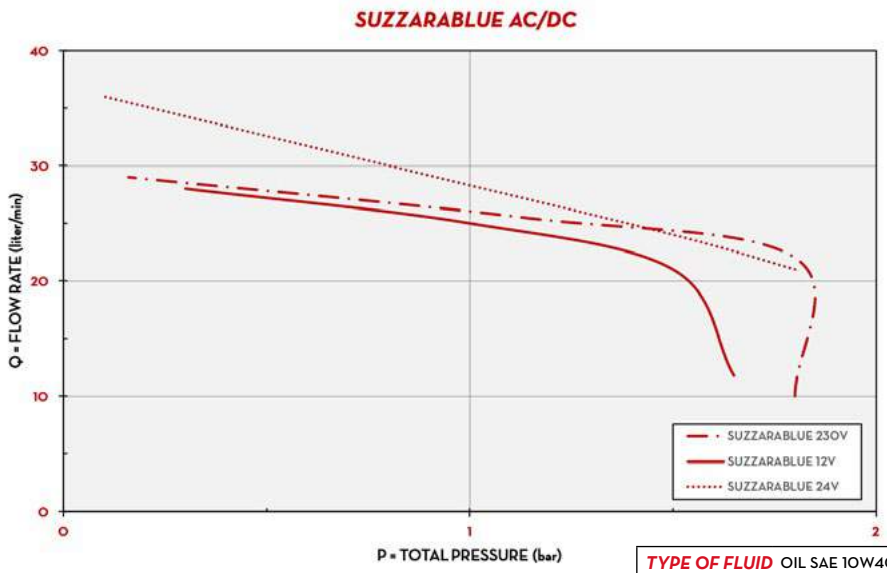

TYPE OF FLUID	OIL SAE 10W40
TEMPERATURE	19 °C

IN THE BOX

- SUZZARABLUE AC/DC PUMP
- INSTRUCTION MANUAL

DETAILS

ON / OFF SWITCH

ELECTRIC CABLE WITH CLAMPS (ONLY DC VERSION)

DIMENSIONS

SUZZARABLUE AC PUMP

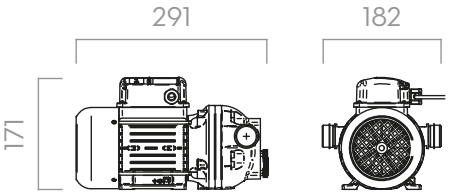

SUZZARABLUE DC PUMP

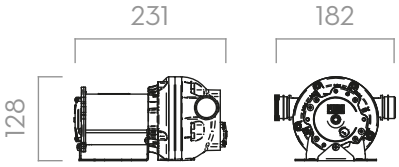

SUZZARABLUE DC PUMP

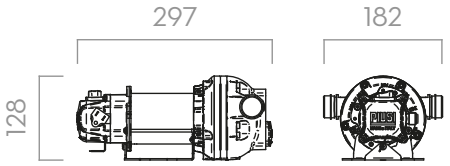

Dimensions expressed in millimeters

MATERIALS

- BODY: POLYPROPILENE
- MEMBRANE: POLYPROPILENE

TECHNICAL DATA

CODE	DESCRIPTION	FLUIDS TYPE	FLOW RATE		VOLTAGE				CABLES	INLET-OUTLET	ON/OFF
			L/MIN	GPM	AC V./HZ DC VOLT	RPM	POWER WATT	AMP. MAX.	MOD.	BSP	SWITCH
F00203090	SUZZARABLUE AC PUMP 230/50	W Ad A	30-35	8-9	230/50				YES	3/4"	YES
F00204080	SUZZARABLUE DC PUMP 12V	W Ad	35	9,2	12	2800	260	22	YES	3/4"	YES
F00204090	SUZZARABLUE DC PUMP 24V	W Ad	35	9,2	24	2800	310	13	YES	3/4"	YES

SUZZARABLUE PUMP

GARDA

FEATURES

- SELF-PRIMING
- CONTINUOUS DUTY (AC VERSION)
- THERMAL PROTECTION
- IP65

The PIUSI GARDA pump, suitable for the transfer of water, diesel and oil, consists of a gear pump that ensures greater power during transfer, in the event that the liquid being delivered has a low to medium viscosity. The PIUSI GARDA electric pump is a self-priming device, available both AC and DC versions, with a high degree of suction and is particularly suitable for the transfer of non-corrosive lubricating oils or viscous liquids.

PERFORMANCE

UP TO 10 L/MIN	AC/DC VOLTAGE
FLOW RATE	POWER

GARDA AC

GARDA DC

PACKAGING

CODE	WEIGHT		PACKAGING			
	KG	LBS	MM	INCH	PCS/PALLET	PCS/BOX
NMT450000A	1,7	3,7	150X120X105	5,9X4,7X4,1	-	1
NMT450001A	1,7	3,7	150X120X105	5,9X4,7X4,1	-	1
NMT450002A	2,7	5,9	150X120X105	5,9X4,7X4,1	-	1
NMT450003A	2,7	5,9	150X120X105	5,9X4,7X4,1	-	1
NMT460000A	2,8	6,2	360X130X102	14,2X7,3X4	-	1
NMT460001A	2,8	6,2	360X130X102	14,2X7,3X4	-	1
NMT450006	6	13,2	360X130X102	14,2X7,3X4	-	1

CHART

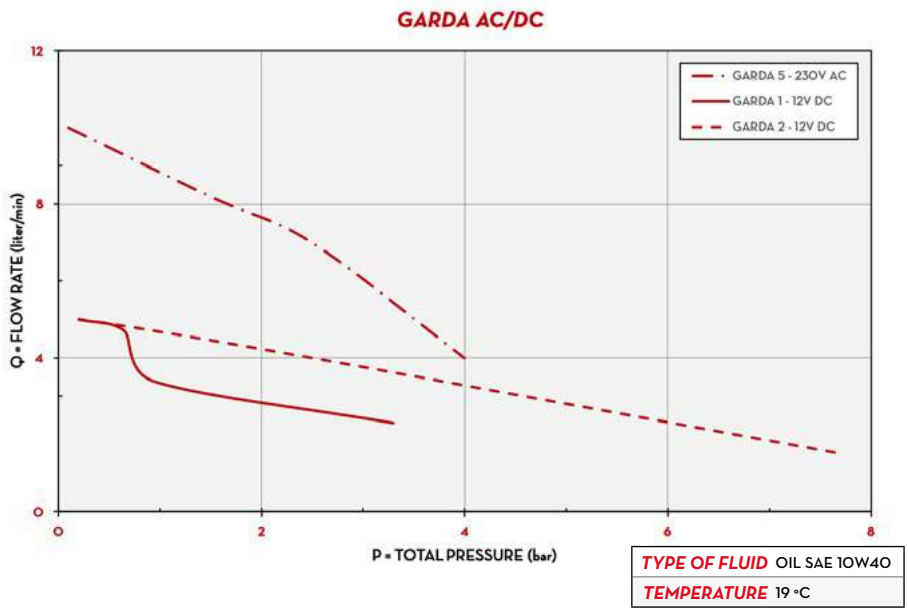

TYPE OF FLUID	OIL SAE 10W40
TEMPERATURE	19 °C

IN THE BOX

- GARDA PUMP
- INSTRUCTION MANUAL

DETAILS

ON/OFF SWITCH

BRONZE GEAR

DIMENSIONS

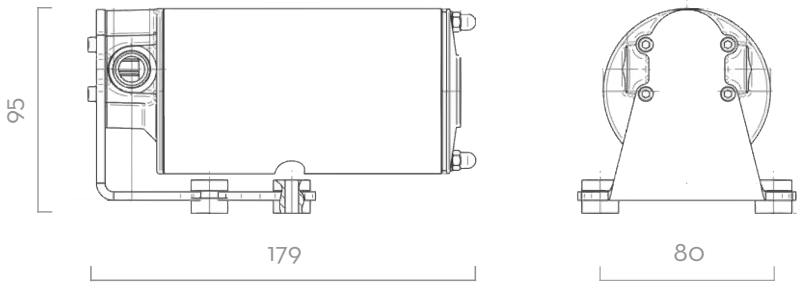

Dimensions expressed in millimeters

MATERIALS

- BODY: CAST IRON
- SHAFT: STEEL
- GEARS: BRONZE

TECHNICAL DATA

CODE	DESCRIPTION	FLUIDS TYPE	FLOW RATE		WORKING PRESSURE		VOLTS/HZ	MAX DRAW	FUSE	PORTS
			L/MIN	GPM	BAR	PSI				BSP
NMT450000A	GARDA 1 12V	O D W	8	2,1	1,5	22	12	12 A	-	3/8"
NMT450001A	GARDA 1 24V	O D W	8	2,1	1,5	22	24	6 A	-	3/8"
NMT450002A	GARDA 2 12V	O D W	10	2,6	3,5	50	12	19 A	-	3/8"
NMT450003A	GARDA 2 24V	O D W	10	2,6	3,5	50	24	10 A	-	3/8"
NMT460000A	GARDA 2 12V W/WITCH 2MT CABLE	O D W	10	2,6	3,5	50	12	19 A	25 A	3/8"
NMT460001A	GARDA 2 24V W/WITCH 2MT CABLE	O D W	10	2,6	3,5	50	24	10 A	15 A	3/8"
NMT450006	GARDA 5 230V/50HZ	O D	10	2,6	3,5	50	230/50	1,8 A	1,8 A	3/8"

AMALFI

FEATURES

- *STURDY STRUCTURE*
- *MECHANICAL METER*
- *INDUCTION THERMAL-PROTECTED MOTOR*
- *OVERLOAD PROTECTION*
- *BUILT-IN MESH FILTER*
- *IP 55*

The PIUSI AMALFI pump is a water transfer pump available both in the AC and DC version. They are particularly suitable for the transfer of fresh and salt water and is used mainly in the marine sector for all those conditions in which it is necessary to transfer water from a drum. The AMALFI AC electric pump is self-priming with flexible impeller and is characterized by a body made entirely of polypropylene and a chamber completely covered in stainless steel, with rubber impeller and stainless steel shaft that makes it durable. The DC version has excellent suction and pressure capabilities and in case of suction of particles and solid debris does not risk any damage.

PERFORMANCE

UP TO 34 L/MIN	AC/DC VOLTAGE
FLOW RATE	POWER

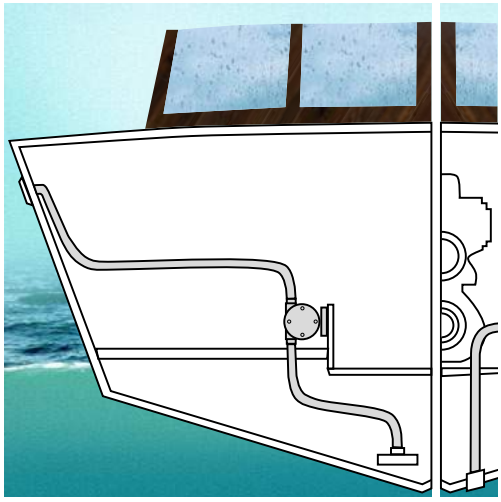

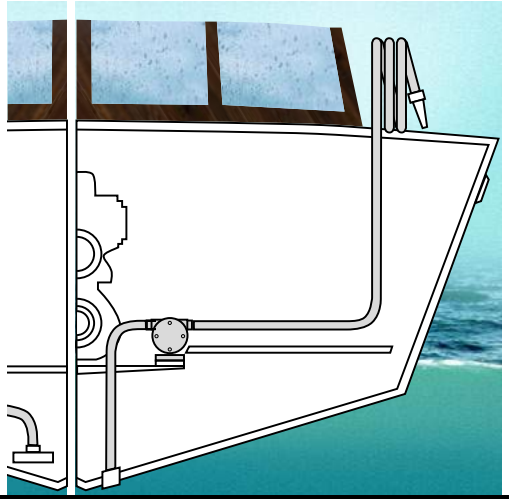

AMALFI AC

AMALFI DC

PACKAGING

CODE	WEIGHT		PACKAGING			
	KG	LBS	MM	INCH	PCS/PALLET	PCS/BOX
NMT400000	3	6,6	200X130X105	7,9X5,1X4,1	-	1
NMT400001	3	6,6	200X130X105	7,9X5,1X4,1	-	1
NMT400003	6	13,2	350X185X260	13,8X7,3X10,2	-	1

CHART

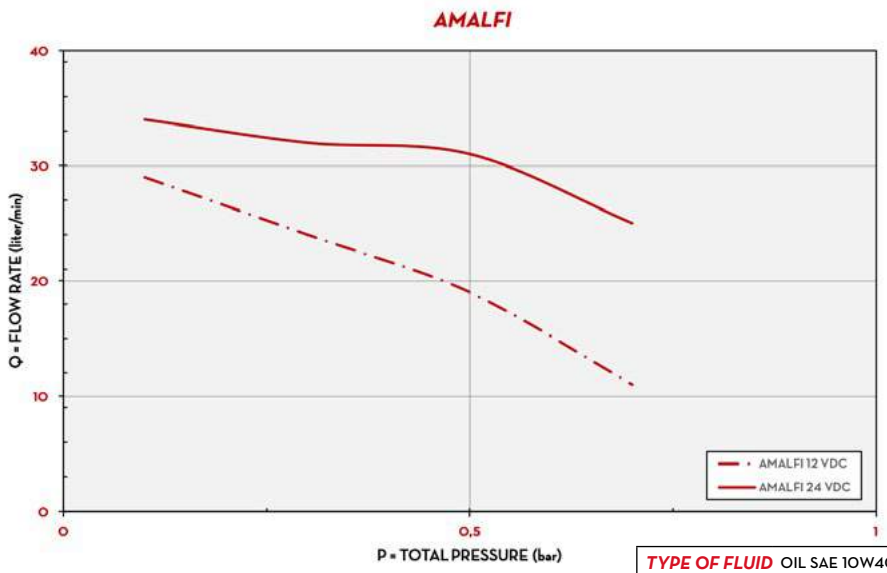

TYPE OF FLUID	OIL SAE 10W40
TEMPERATURE	19 °C

IN THE BOX

- AMALFI PUMP
- INSTRUCTION MANUAL

DETAILS

ON/OFF SWITCH

STAINLESS STEEL CHAMBER

FLEXIBLE IMPELLER

MATERIALS

- BODY: TECHNOPOLYMER/STAINLESS STEEL
- IMPELLER: TECHNOPOLYMER

DIMENSIONS

AMALFI DC

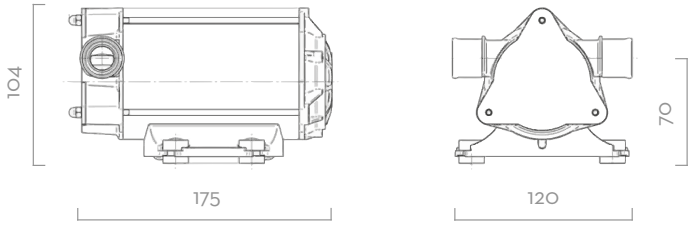

AMALFI AC

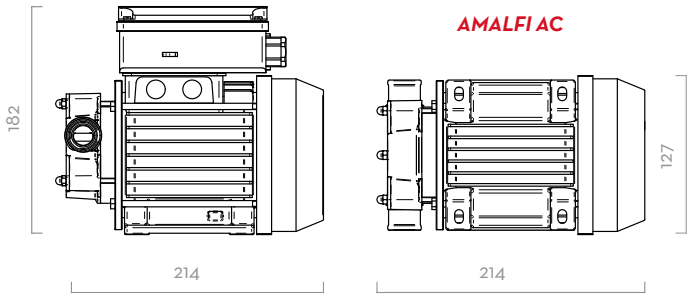

Dimensions expressed in millimeters

TECHNICAL DATA

CODE	DESCRIPTION	FLUIDS TYPE	FLOW RATE		WORKING PRESSURE		VOLTS/HZ	MAX DRAW	FUSE	PORTS
			L/MIN	GPM	BAR	PSI				BSP
NMT400000	AMALFI 1 12V	W	32	8,4	1	14,5	12	13 A	35 A	1/2"
NMT400001	AMALFI 1 24V	W	34	9	1	14,5	24	16 A	15 A	1/2"
NMT400003	AMALFI 5 -230V 50	W	30	7,3	1	14,5	230/50	1,5 A	-	1/2"

MA 130

FEATURES

- IN/OUT INTERCHANGEABLE
- LONG LIFE DIAPHRAGM
- BUILT-IN DIFFUSER
- SUITABLE FOR IMMERSED INSTALLATIONS
- HEAVY DUTY
- EXPLOSION PROOF (EX ZONE 2)
- STURDY DESIGN

The PIUSI MA130 is a pneumatic diaphragm pump suitable for transferring high viscosity fluids and waste oils. Thanks to its small size this pumps is easy to fit in any working environment.

MA 130

PERFORMANCE

UP TO 90 L/MIN FLOW RATE	MAX 7 BAR AIR PRESSURE
MAX CAPACITY 5 M SELF PRIMING	MAX Ø 4MM PASSING SOLID

PACKAGING

CODE	WEIGHT		PACKAGING			
	KG	LBS	MM	INCH	PCS/PALLET	PCS/BOX
F00208A00	4	8,8	220X310X320	8,7X12,2X12,6		1

CHART

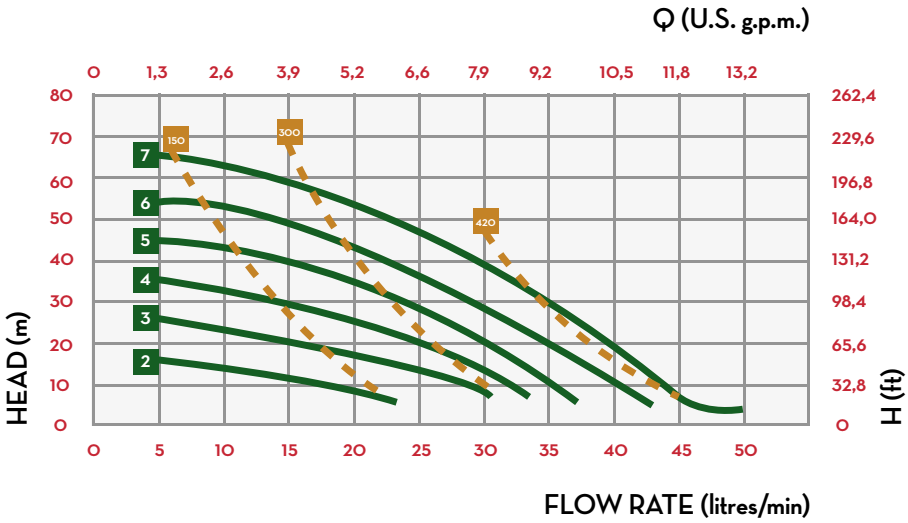

IN THE BOX

- MA 130 PUMP
- INSTRUCTION MANUAL

DETAILS

HEAVY DUTY MATERIALS

TECHNOPOLYMER BODY

EASY TO FIT

DIMENSIONS

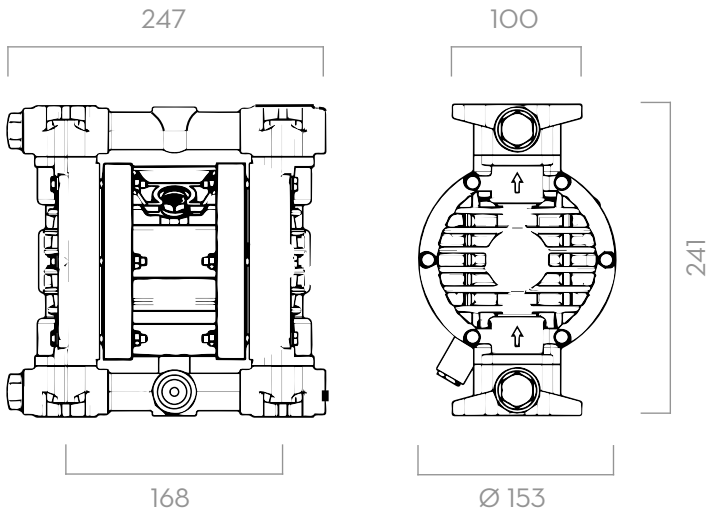

Dimensions expressed in millimeters

MATERIALS

- BODY: TECHNOPOLYMER
- FITTINGS: ALLUMINIUM
- DIAPHRAGMS: TECHNOPOLYMER

TECHNICAL DATA

CODE	DESCRIPTION	FLUIDS TYPE	PUMP BODY	IN / OUT	FLOW RATE	MEMBRANE TYPE	DIAPHRAGM	BALLS	BALL SEATS*	O-RING*	INTAKE / DELIVERY CONNECTION	AIR CON-NECTION	MAX SELF-PRI-MING CAPACITY	MAX HEAD**	MAX AIR SUP-PLY PRESSURE	MAX Ø OF PASSING SOLID
					L/MIN								M	M	BAR	MM
F00208A00	PIUSI MA 130	O D	ALLUMINIUM	1/2" G	50	SINGLE	NBR	NBR	ALLUMINIUM	NBR	G 1/2" F	G 3/8" F	5	70	7	4

(*) ON REQUEST WE CAN PROVIDE MEMBRANES, BALLS, BALL SEATS AND O-RINGS IN DIFFERENT MATERIALS.
(**) THE VALUE DEPENDS ON THE CONFIGURATION OF THE PUMP

MA 140

FEATURES

- IN/OUT SWAPPABLE
- BUILT-IN DIFFUSER
- SUITABLE FOR IMMERSED INSTALLATION
- HEAVY DUTY
- EXPLOSION PROOF (EX ZONE 2)
- EASY TO FIT
- STURDY DESIGN

The PIUSI MA140 is a long life pneumatic diaphragm pump suitable for transferring high viscosity fluids and waste oils. The small size of this pump allows a wide range of possible installations.

MA 140

PERFORMANCE

UP TO 100 L/MIN FLOW RATE	MAX 7 BAR AIR PRESSURE
6M MAX CAPACITY SELF PRIMING	MAX Ø 4MM PASSING SOLID

PACKAGING

CODE	WEIGHT		PACKAGING			
	KG	LBS	MM	INCH	PCS/PALLET	PCS/BOX
F00208P10	5	11	240X380X350	9,4X15X13,8		1

CHART

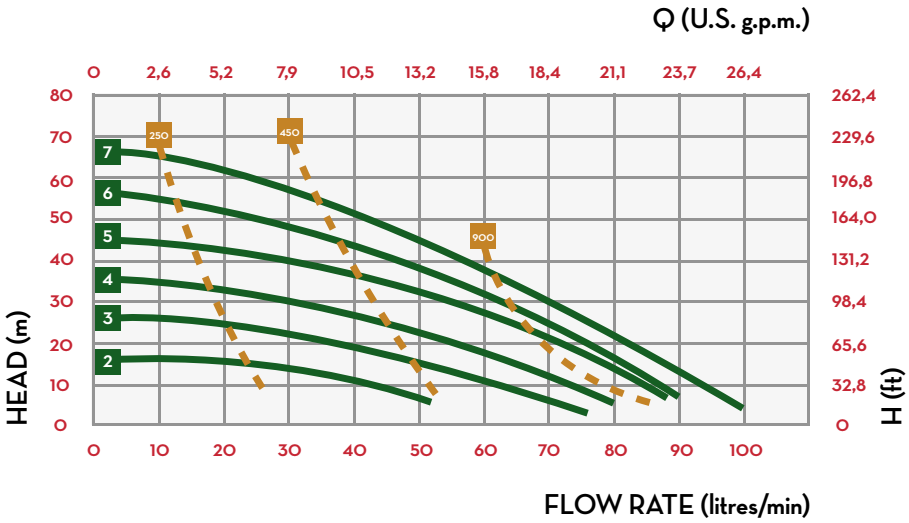

IN THE BOX

- MA 140 PUMP
- INSTRUCTION MANUAL

DETAILS

HEAVY DUTY MATERIALS

TECHNOPOLYMER BODY

STURDY DESIGN

DIMENSIONS

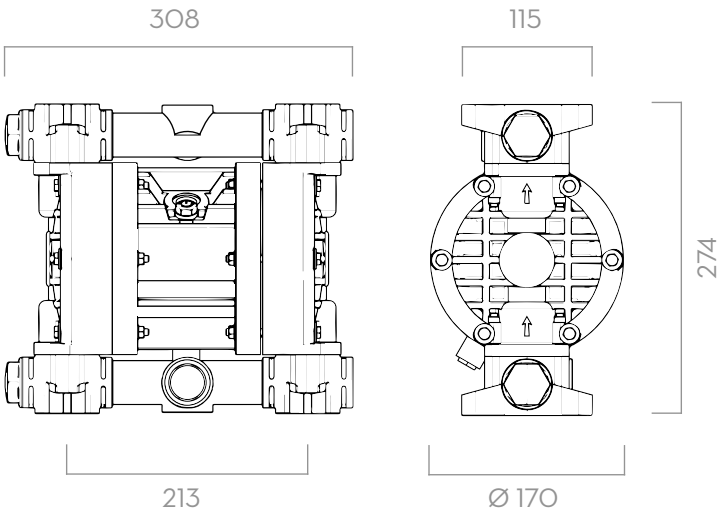

Dimensions expressed in millimeters

MATERIALS

- BODY: TECHNOPOLYMER
- FITTINGS: ALLUMINIUM
- DIAPHRAGMS: TECHNOPOLYMER

TECHNICAL DATA

CODE	DESCRIPTION	FLUIDS TYPE	PUMP BODY	IN / OUT	FLOW RATE	MEMBRANE TYPE	DIAPHRAGM	BALLS	BALL SEATS*	O-RING*	INTAKE / DELIVERY CONNECTION	AIR CON-NECTION	MAX SELF-PRI-MING CAPACITY	MAX HEAD**	MAX AIR SUP-PLY PRESSURE	MAX Ø OF PASSING SOLID
					L/MIN								M	M	BAR	MM
F00208P10	PIUSI MA 140	O D	POLYPROPYLENE	1" G	100	SINGLE	NBR	NBR	POLYPROPYLENE	NBR	G 1" F	G 3/8" F	6	70	7	4

(*) ON REQUEST WE CAN PROVIDE MEMBRANES, BALLS, BALL SEATS AND O-RINGS IN DIFFERENT MATERIALS.
(**) THE VALUE DEPENDS ON THE CONFIGURATION OF THE PUMP

MA 180

FEATURES

- IN/OUT SWAPPABLE
- BUILT-IN DIFFUSER
- SUITABLE FOR IMMERSED INSTALLATION
- HEAVY DUTY
- EXPLOSION PROOF (EX ZONE 2)
- EASY TO FIT
- STURDY DESIGN

The PIUSI MA180 is a long life pneumatic diaphragm pump suitable for transferring high viscosity fluids and waste oils. The small size of this pump allows a wide range of possible installations.

MA 180

PERFORMANCE

UP TO 150 L/MIN FLOW RATE	MAX 7 BAR AIR PRESSURE
5M MAX CAPACITY SELF PRIMING	MAX Ø 4MM PASSING SOLID

PACKAGING

CODE	WEIGHT		PACKAGING			
	KG	LBS	MM	INCH	PCS/PALLET	PCS/BOX
F00208A10	8,2	18,1	270X390X400	10,6X15,4X15,7	-	1

CHART

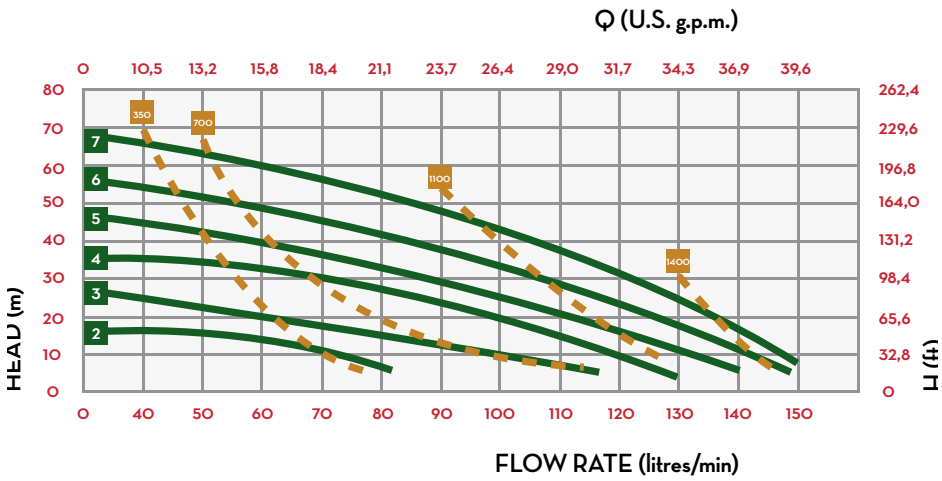

IN THE BOX

- MA 180 PUMP
- INSTRUCTION MANUAL

DETAILS

HEAVY DUTY MATERIALS

TECHNOPOLYMER BODY

STURDY DESIGN

DIMENSIONS

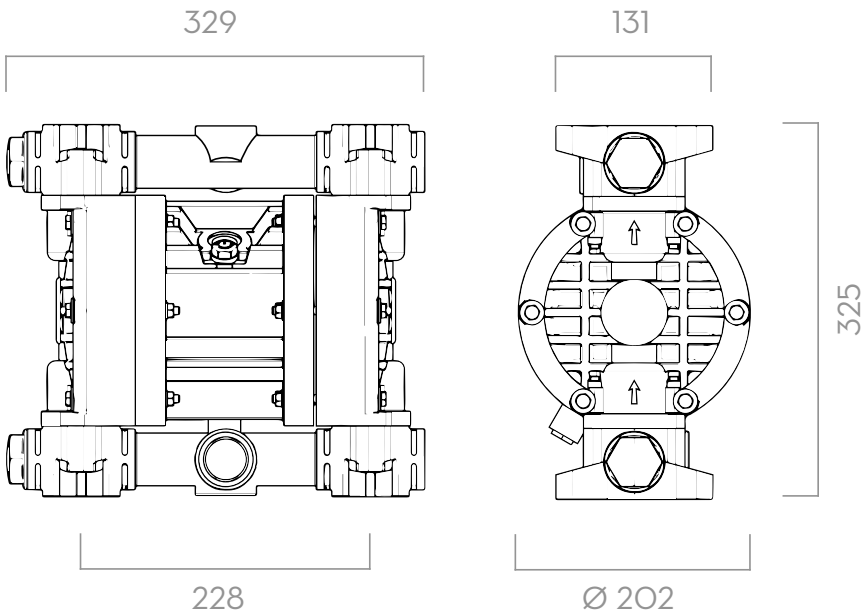

Dimensions expressed in millimeters

MATERIALS

- BODY: TECHNOPOLYMER
- FITTINGS: ALLUMINIUM
- DIAPHRAGMS: TECHNOPOLYMER

TECHNICAL DATA

CODE	DESCRIPTION	FLUIDS TYPE	PUMP BODY	IN / OUT	FLOW RATE	MEMBRANE TYPE	DIAPHRAGM	BALLS	BALL SEATS*	O-RING*	INTAKE / DELIVERY CONNECTION	AIR CON-NECTION	MAX SELF-PRI-MING CAPACITY	MAX HEAD**	MAX AIR SUP-PLY PRESSURE	MAX Ø OF PASSING SOLID
					L/MIN								M	M	BAR	MM
F00208A10	PIUSI MA 180	O D	ALLUMINIUM	1" G	150	SINGLE	NBR	NBR	PPS-V	NBR	G 1" F	G 3/8" F	5	70	7	4

(*) ON REQUEST WE CAN PROVIDE MEMBRANES, BALLS, BALL SEATS AND O-RINGS IN DIFFERENT MATERIALS.
(**) THE VALUE DEPENDS ON THE CONFIGURATION OF THE PUMP

MA 190

FEATURES

- IN/OUT SWAPPABLE
- BUILT-IN DIFFUSER
- SUITABLE FOR IMMERSED INSTALLATION
- HEAVY DUTY
- EXPLOSION PROOF (EX ZONE 2)
- EASY TO FIT
- STURDY DESIGN

Designed to guarantee high performance and maximum safety, the PIUSI MA 190 air-operated diaphragm pump for oil is equipped with a sturdy central body, side half-shells and suction and delivery manifolds in aluminum. The top quality diaphragms that represent the core of the system are in NBR and guarantee the transfer of high viscosity oil, even when there can be solid parts in suspension, as can happen with used oil.The system has the advantage of the waterproofing, which is the result of the elimination of any sliding between parts.

MA 190

PERFORMANCE

UP TO 220 L/MIN FLOW RATE	5M MAX CAPACITY SELF PRIMING
MAX 7 BAR AIR PRESSURE	MAX Ø 4MM PASSING SOLID

PACKAGING

CODE	WEIGHT		PACKAGING			
	KG	LBS	MM	INCH	PCS/PALLET	PCS/BOX
F00208A20	16	35,3	290X470X460	11,4X18,5X18,1		1

CHART

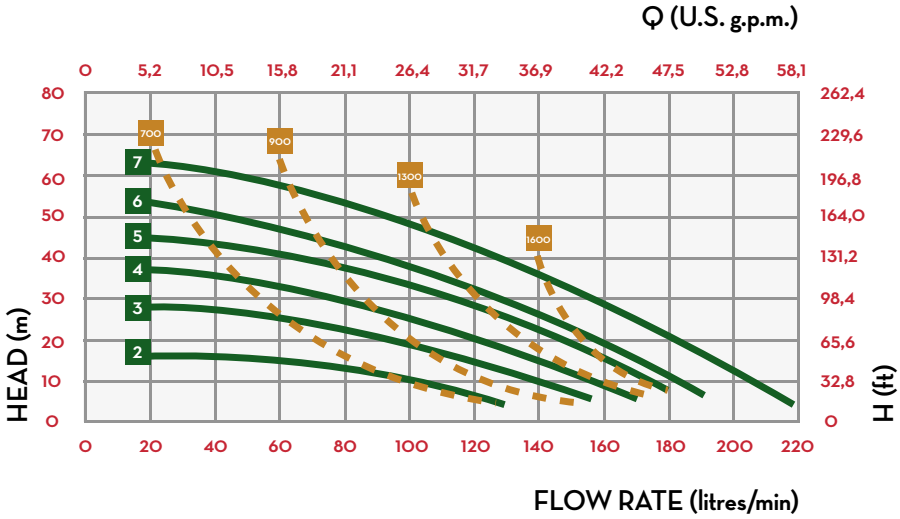

IN THE BOX

- MA 190 PUMP
- INSTRUCTION MANUAL

DETAILS

HEAVY DUTY MATERIALS

TECHNOPOLYMER BODY

STURDY DESIGN

DIMENSIONS

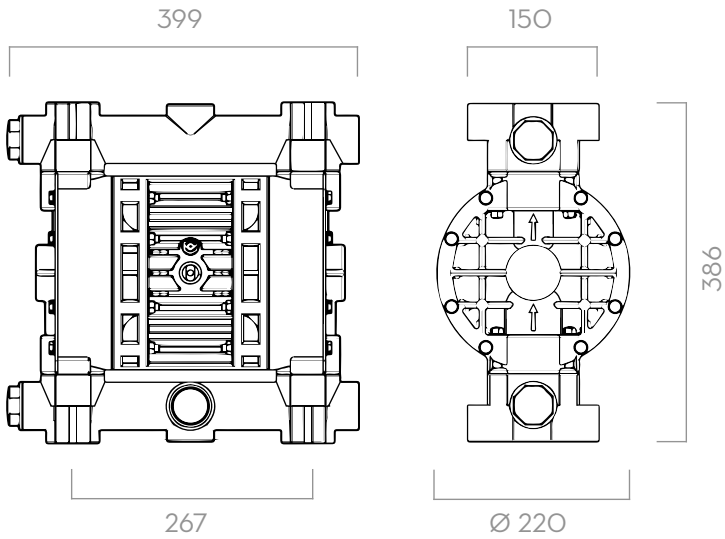

Dimensions expressed in millimeters

MATERIALS

- BODY: TECHNOPOLYMER
- FITTINGS: ALLUMINIUM
- DIAPHRAGMS: TECHNOPOLYMER

TECHNICAL DATA

CODE	DESCRIPTION	FLUIDS TYPE	PUMP BODY	IN / OUT	FLOW RATE	MEMBRANE TYPE	DIAPHRAGM	BALLS	BALL SEATS*	O-RING*	INTAKE / DELIVERY CONNECTION	AIR CON-NECTION	MAX SELF-PRI-MING CAPACITY	MAX HEAD**	MAX AIR SUP-PLY PRESSURE	MAX Ø OF PASSING SOLID
					L/MIN								M	M	BAR	MM
F00208A20	PIUSI MA 190	O D	ALLUMINIUM	1" 1/4" G	220	SINGLE	NBR	NBR	PPS-V	NBR	G 1"1/4 F	G 1/2" F	6	70	7	4

(*) ON REQUEST WE CAN PROVIDE MEMBRANES, BALLS, BALL SEATS AND O-RINGS IN DIFFERENT MATERIALS.
(**) THE VALUE DEPENDS ON THE CONFIGURATION OF THE PUMP

PIUSI HAND PUMP

FEATURES

- OPTIMIZED SUCTION CAPACITY
- STURDY CONNECTOR
- HEAVY DUTY LEVER
- FLUENT REVOLUTION
- HIGH EFFICIENCY
- ADJUSTABLE SUCTION PIPE
- DURABILITY
- SELECTED MATERIALS
- 100% TESTED

The PIUSI HAND PUMP is a rotary vane pump suitable for transferring low viscosity oils and diesel. Entirely designed, manufactured and certified in Italy this sturdy pump guarantees a professional performance.

HAND PUMP FOR OIL

PERFORMANCE

UP TO	AVAILABLE WITH
38 L/100 REVOLUTIONS	3M LENGTH
FLOW RATE	DELIVERY HOSE

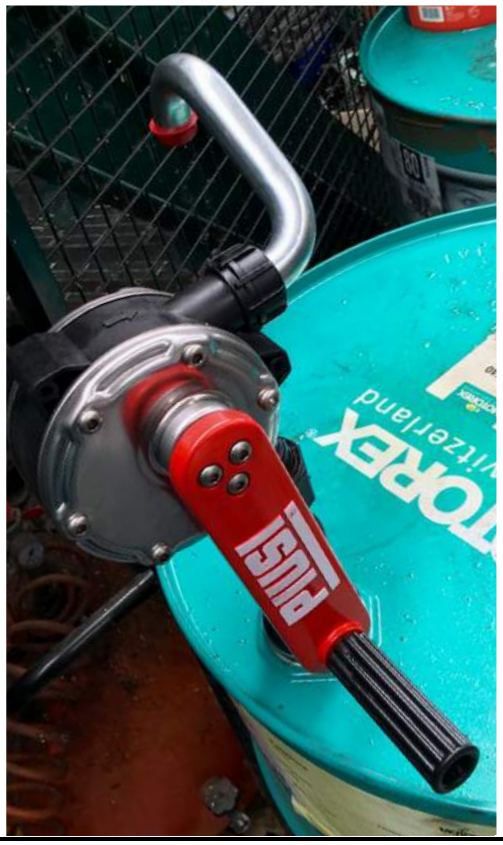

PACKAGING

CODE	WEIGHT		PACKAGING			N. BOXES/ EUROPALLET	
	KG	LBS	MM	PCS/PALLET	PCS/BOX	✈	🚢
F00332500	2,1	4,6	350X170X140		1	50	100

CHART

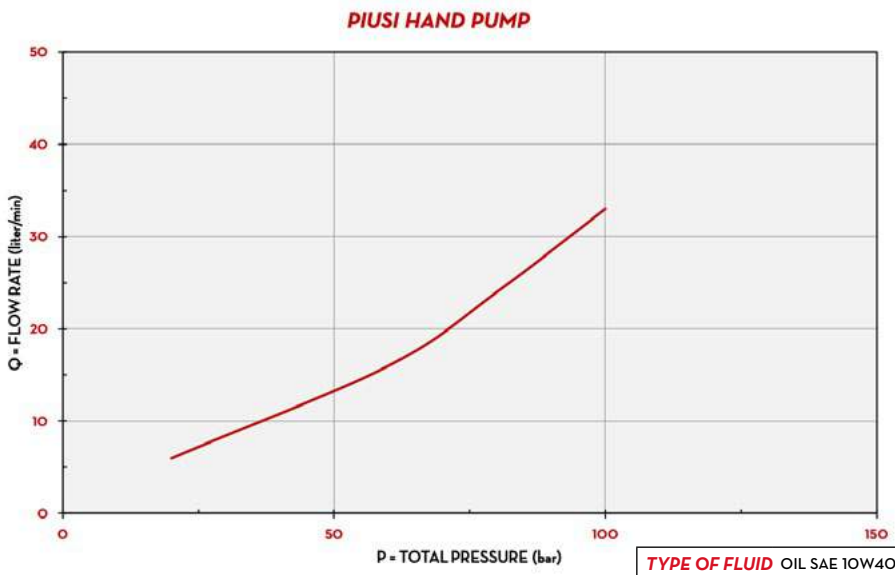

TYPE OF FLUID	OIL SAE 10W40
TEMPERATURE	23 °C

IN THE BOX

- PIUSI HAND PUMP
- SPOUT
- SUCTION PIPE
- DRUM CONNECTOR
- INSTRUCTION MANUAL

DETAILS

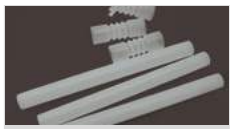
SUCTION PIPE

NON-SLIP HANDLE

HIGH QUALITY MATERIALS

DIMENSIONS

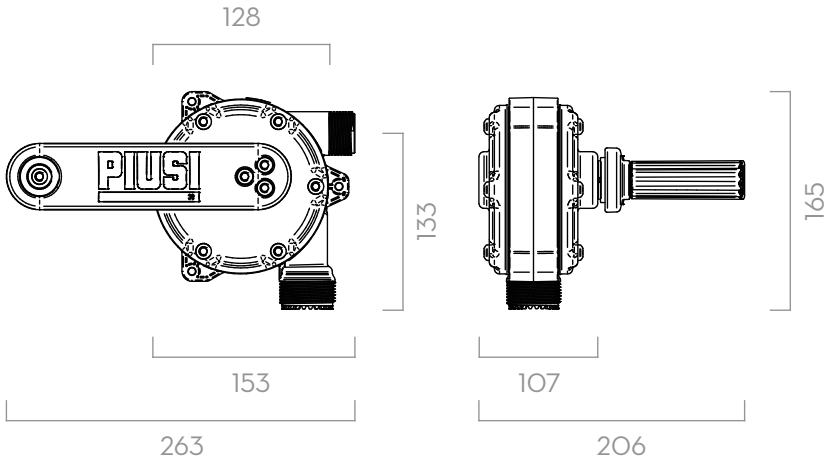

Dimensions expressed in millimeters

MATERIALS

- BODY: STAINLESS STEEL,TECHNOPOLYMER
- ROTOR: TECHNOPOLYMER
- VANES: TECHNOPOLYMER

TECHNICAL DATA

CODE	DESCRIPTION	FLUIDS TYPE	CAPACITY PER 100 REVOLUTIONS		DRUM CONNECTOR	SUCTION TUBE	"S" SPOUT AND HOSE TAIL	DELIVERY HOSE LENGHT
			L	USG				M
F00332500	PIUSI HAND PUMP 2" BSP	O	38	10	2" BSP	YES	YES	-

PIUSI HAND PUMP

BARREL PUMP

FEATURES

- READY / EASY TO USE
- MOBILE
- HEAVY DUTY
- SUITABLE FOR ANY OPERATING CONDITION

The PIUSI BARREL PUMP is an handy manual pump suitable for dispensing grease and oil in limited quantities.

PERFORMANCE

UP TO	SUITABLE FOR
16 KG	OIL/GREASE
TANK CAPACITY	FLUIDS

BARREL PUMP

PACKAGING

CODE	WEIGHT		PACKAGING			
	KG	LBS	MM	INCH	PCS/PALLET	PCS/BOX
PIUSI BARREL PUMPS						
F0033215A	14	-	240X570X560	-	-	1
F0033216A	14	-	240X570X560	-	-	1

DIMENSIONS

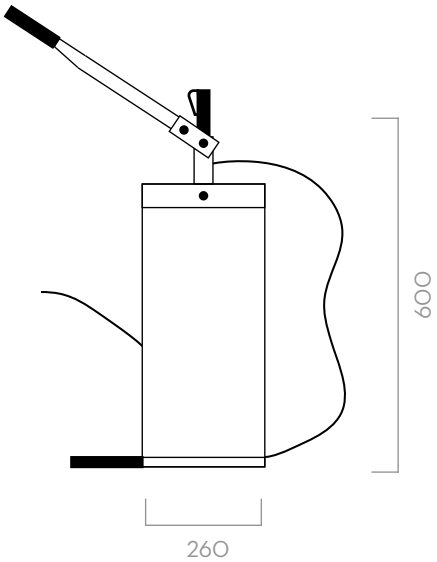

Dimensions expressed in millimeters

IN THE BOX

- BARREL PUMP
- DELIVERY HOSE

DETAILS

NON-SLIP HANDLE

SPOUT FOR GREASE

SPOUT FOR OIL

MATERIALS

- BODY: STEEL
- LEVER: GALVANIZED STEEL

TECHNICAL DATA

CODE	DESCRIPTION	FLUIDS TYPE	CAPACITY KG
PIUSI BARREL PUMPS			
F0033215A	GREASE PUMP	G	16
F0033216A	OIL PUMP	O	16

BARREL PUMP

GREASE LEVER GUN

FEATURES

- *READY / EASY TO USE*
- *MOBILE*
- *HEAVY DUTY*
- *SUITABLE FOR ANY OPERATING CONDITION*

The PIUSI GREASE LEVER GUN is a manual greasing equipment suitable for dispensing grease in limited quantities.

PERFORMANCE

UP TO	SUITABLE FOR
1000 CC	GREASE
CAPACITY	FLUID

LEVER GREASE GUN

PACKAGING

CODE	WEIGHT		PACKAGING			
	KG	LBS	MM	INCH	PCS/PALLET	PCS/BOX
GREASE LEVER GUN						
F0035200A	1,1		365X140X65			1
F0035201A	1,7		480X140X65			1
F0035202A	1,9		540X140X65			1

DIMENSIONS

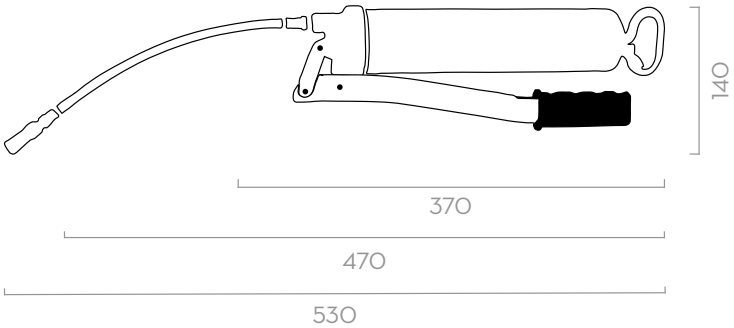

Dimensions expressed in millimeters

IN THE BOX

- GREASE LEVER GUN
- DELIVERY SPOUT

DETAILS

NON-SLIP HANDLE

SPOUT FOR GREASE

MATERIALS

- BODY: STEEL
- LEVER: GALVANIZED STEEL

TECHNICAL DATA

CODE	DESCRIPTION	FLUIDS TYPE	CAPACITY CC/OZ
GREASE LEVER GUN			
F0035200A	LEVER GREASE GUN 500		500 / 16
F0035201A	LEVER GREASE GUN 800		800 / 28
F0035202A	LEVER GREASE GUN 1000		1000 / 35

GREASE LEVER GUN

PUMPS ACCESSORIES

PNEUMATIC PISTON PUMPS

P3.5:1:1	CODE	DESCRIPTION
	F19965000	4-WHEELS TROLLEY FOR 20-60KG DRUMS
	F19966000	4-WHEELS TROLLEY FOR 180-200KG DRUMS
	F1997200A	KIT SUCTION PIPE WALL BRACKET PN. PUMP
	F19973000	HOSE 2M F/F 1/2" 150BAR
	F19974000	HOSE 5M M/F 1/2" 150BAR
	F19975000	SUCTION HOSE PNEUMATIC PUMP 1"G L=385MM
	F19976000	SUCTION HOSE PNEUMATIC PUMP 1"G L=555MM
	F19977000	SUCTION HOSE PNEUMATIC PUMP 1"G L=765MM
	F19978000	SUCTION HOSE PNEUMATIC PUMP 1"G L=955MM
	F1997900B	DRIP TRAY FOR NOZZLE

F19975000 F19976000 F19977000 F19978000 F1997200A F19973000 F19974000

F19965000 F19966000 F1997900B

P5.5:1	CODE	DESCRIPTION
	F19965000	4-WHEELS TROLLEY FOR 20-60KG DRUMS
	F19966000	4-WHEELS TROLLEY FOR 180-200KG DRUMS
	F1997200A	KIT SUCTION PIPE WALL BRACKET PN. PUMP
	F19973000	HOSE 2M F/F 1/2" 150BAR
	F19974000	HOSE 5M M/F 1/2" 150BAR
	F19975000	SUCTION HOSE PNEUMATIC PUMP 1"G L=385MM
	F19976000	SUCTION HOSE PNEUMATIC PUMP 1"G L=555MM
	F19977000	SUCTION HOSE PNEUMATIC PUMP 1"G L=765MM
	F19978000	SUCTION HOSE PNEUMATIC PUMP 1"G L=955MM
	F1997900B	DRIP TRAY FOR NOZZLE

F19975000 F19976000 F19977000 F19978000 F1997200A F19973000 F19974000

F19965000 F19966000 F1997900B

P60:1 BOOSTER	CODE	DESCRIPTION
	F20593000	COVER FOR GREASE DRUM 30KG 320MM
	F20596000	COVER FOR GREASE DRUM 60KG 420MM
	F20598000	COVER FOR GREASE DRUM 60KG 385MM
	F20606000	COVER FOR GREASE DRUM 200KG 610MM
	F20792000	COVER FOR GREASE DRUM 12/16KG 285MM
	F20594000	FOLLOWER PLATE GREASE DRUM 18/30KG 300MM
	F20597000	FOLLOWER PLATE GREASE DRUM 50/60KG 400MM
	F20599000	FOLLOWER PLATE GREASE DRUM 50/60KG 370MM
	F20607000	FOLLOWER PLATE GREASE DRUM 180/200KG 590
	F20793000	FOLLOWER PLATE GREASE DRUM 12/16KG 270MM
	F21470000	PRESSURE REGULATOR WITH GAUGE 1/4"
	F21472000	PRESSURE REGULATOR WITH GAUGE 1/2"
	F21471000	FILTER REGULATOR W/ REGULATOR GAUGE 1/4"
	F21473000	FILTER REGULATOR W/ REGULATOR GAUGE 1/2"
	F2060500A	GREASE GUN RIGID HOSE
	F2060501A	GREASE GUN FLEX HOSE 4-JAW COUPLER
	F20603000	SWIVEL 1/4" M/F
	F2060400A	-Z- SWIVEL 1/4" M/F
	F2060000A	HOSE 2M 1/4"X1/4" M/F DN6 EN857 2SC
	F2060100A	HOSE 4M 1/4"X1/4" M/F DN6 EN857 2SC
	F2060200A	HOSE 6M 1/4"X1/4" M/F DN6 EN857 2SC
	F20595000	2-WHEELS TROLLEY FOR 12-30KG DRUMS

F20792000 F20593000 F20598000 F20596000 F20606000 F2060500A F2060501A

F20595000 F20598000 F20593000 F20596000 F2060000A F2060100A F2060200A F20603000 F2060400A

F20793000 F20594000 F20599000 F20597000 F20607000 F21471000 F21473000 F21470000 F21472000

ELECTRIC PUMPS

VISCOMAT VANE	CODE	DESCRIPTION
	F0883200A	FLANGE D.80 1IN E80/E120
	F0898500A	OR SEAL 3156 , OVAL SECTION
	F0918000A	FLANGE KIT 1" BSP
	F1082400A	KIT FLANGED + ELBOW + OR + SCREW
	F1106200B	KIT FLANGE CUBE 70
	F1222800B	FLANGED TUBE 300MM
	F1290400A	FLANGES , KIT
	F1290600A	KIT FLANGE WITH NUTS
	R08417000	KIT N°2 OR SEAL 3156 , FLANGE
	R0977900A	KIT FLANGE FOR PANTHER WITH K33
	R12229000	FLANGED TUBE 130MM
	R13251000	KIT CRIMPED FLANGED S.S.TANK FM+MC

R12229000 R1222800A R13251000 R10824000 F0883200A

VISCOMAT GEAR	CODE	DESCRIPTION
	F0883200A	FLANGE D.80 1IN E80/E120
	F0898500A	OR SEAL 3156 , OVAL SECTION
	F0918000A	FLANGE KIT 1" BSP
	F1082400A	KIT FLANGED + ELBOW + OR + SCREW
	F1106200B	KIT FLANGE CUBE 70
	F1222800B	FLANGED TUBE 300MM
	F1290400A	FLANGES , KIT
	F1290600A	KIT FLANGE WITH NUTS
	R08417000	KIT N°2 OR SEAL 3156 , FLANGE
	R0977900A	KIT FLANGE FOR PANTHER WITH K33
	R12229000	FLANGED TUBE 130MM
	R13251000	KIT CRIMPED FLANGED S.S.TANK FM+MC

R12229000 R1222800A R13251000 R10824000 F0883200A

FLANGE

OVAL RING

O-RING

NUT

SCREW

GRUB SCREW

CODE	DESCRIPTION	FLANGE	O-RING	OVAL RING	SCREW M8X20	SCREW M8X30	NUT M8	GRUB SCREW M8X50
R12904000	KIT FLANGE OVAL RING	1	-	1	2	-	2	-
R09180000	KIT FLANGE O-RING	2	2	-	4	-	-	-
R1106200A	KIT FLANGE	1	1	-	2	-	-	-
R12906000	KIT FLANGE WITH NUT	1	-	-	-	-	2	-
R0977900A	KIT FLANGE TO CONNECT METER	1	2	-	-	-	2	2
F08832000	FLANGE	1	-	-	-	-	-	-
R08985000	OVAL RING	-	-	1	-	-	-	-
R08417000	O-RING	-	2	-	-	-	-	-
R08812000	SCREW M8X20	-	-	-	10	-	-	-
R08043000	SCREW M8X30	-	-	-	-	10	-	-
R192710000	KIT FLANGE TO CONNECT FILTER	1	1	1	-	2	2	-

PUMPS ACCESSORIES

ELECTRIC PUMPS

VISCO FLOWMAT	CODE	DESCRIPTION
	F0883200A	FLANGE D.80 1IN E80/E120
	F0898500A	OR SEAL 3156 , OVAL SECTION
	F0918000A	FLANGE KIT 1" BSP
	F1082400A	KIT FLANGED + ELBOW + OR + SCREW
	F1106200B	KIT FLANGE CUBE 70
	F1222800B	FLANGED TUBE 300MM
	F1290400A	FLANGES , KIT
	F1290600A	KIT FLANGE WITH NUTS
	R08417000	KIT N°2 OR SEAL 3156 , FLANGE
	R0977900A	KIT FLANGE FOR PANTHER WITH K33
	R12229000	FLANGED TUBE 130MM
	R13251000	KIT CRIMPED FLANGED S.S.TANK FM+MC

R12229000 R1222800A R13251000 R10824000 F0883200A

VISCOMAT DC	CODE	DESCRIPTION
	F1001100A	CABLE 2X6X2 MT EYELET TERMINAL 12V
	F1003900A	CABLE 2X6X4MT EYELET TERMINAL 24V
	F1004000A	CABLE 2X6X2 MT EYELET TERMINAL 24V
	F1004100A	CABLE 2X6X4MT EYELET TERMINAL 12V
	F1443700A	2 MT CABLE WITH CLAMPS 12V/24V
	F1443800A	4 MT CABLE WITH CLAMPS 12V/24V

F14437000 / F10011000 F10040000 / F14438000 F10041000 / F10039000

HAND PUMPS

PIUSI HAND PUMP	CODE	DESCRIPTION
	F15236000	ADATTATORE M\F 2IN - 56X4 ADBLUE
	F19157000	DRUM CONNECTOR 2" BSP
	F20456000	CHECK VALVE KIT
	R1512800A	ADAPTER M/F 2" - S70X6 ADBLUE

F19157000

R1512800A F15236000

OIL & FUEL FI
100

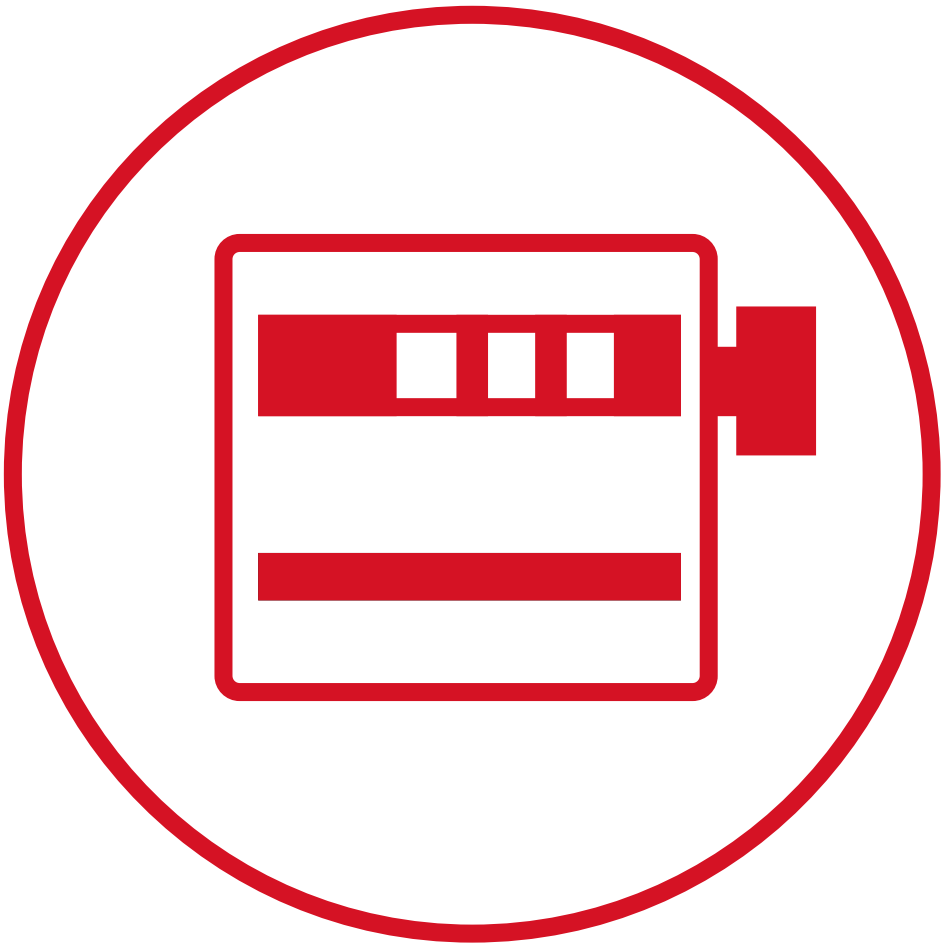

METERS

K400

FEATURES

- READY TO USE
- EASY TO CALIBRATE
- DOUBLE TOTALIZER
- ELECTRONIC RESET FUNCTION
- HIGH ACCURACY
- LOW BATTERY CONSUMPTION
- RUBBER PROTECTION
- ADJUSTABLE UNIT OF MEASUREMENT

The PIUSI K400 is an electric oval gear meter suitable for monitoring the delivery of oils with a wide range of viscosity. The meter is equipped with a digital display and it is also available in pulser version.

PERFORMANCE

UP TO **30 L/MIN**	MAX **70BAR**
FLOW RATE	OPERATING PRESSURE
± 0,5%	**0,3%**
ACCURACY	REPEATABILITY

K400

K400 PULSER

PACKAGING

CODE	WEIGHT		PACKAGING			
	KG	LBS	MM	INCH	PCS/PALLET	PCS/BOX
METER						
F00484000	0,5	1,1	298X198X113	11,7X7,8X4,4		12
PULSER						
F00440200	0,5	1,1	300X160X110	11,8X6,3X4,3		8

CHART

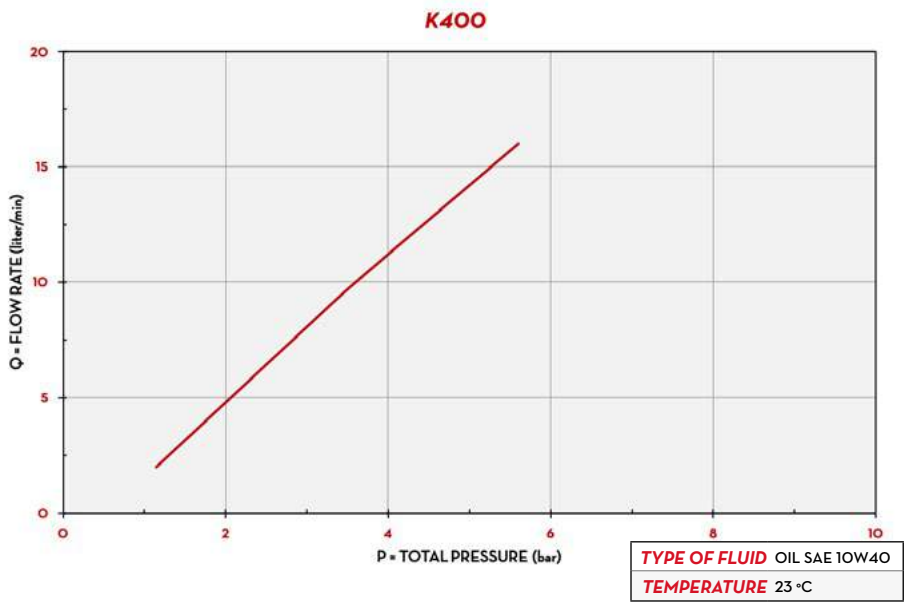

IN THE BOX

- K400 METER
- INSTRUCTION MANUAL

DETAILS

RESET BUTTON

OVAL GEAR

2 AAA BATTERIES INLCUDED

ALLUMINIUM BODY

DIMENSIONS

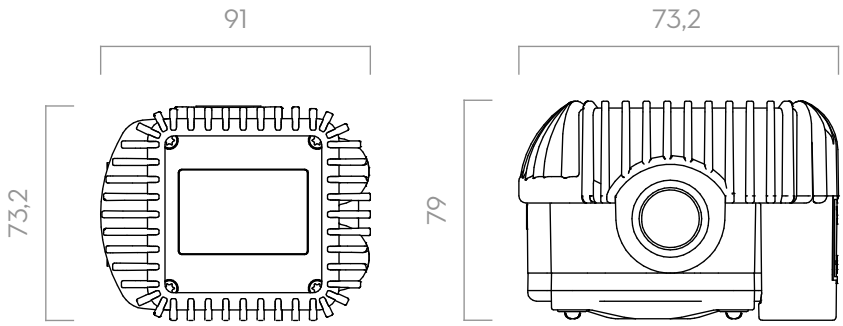

Dimensions expressed in millimeters

MATERIALS

- BODY: ALLUMINIUM
- GEARS: TECHNOPOLYMER

TECHNICAL DATA

CODE	DESCRIPTION	FLUIDS TYPE	FLOW RATE		WORKING PRESSURE		BATTERIES INCLUDED	INLET	OUTLET
			L/MIN	GPM	BAR	PSI	AAA NO.2 2 X 1,5 V		
METER									
F00484000	K400 METER -" BSP	A D O	1 - 30	0,26 - 7,8	70	994	YES	1/2" BSP	1/2" BSP
PULSER									
F00440200	K400 PULSER -" BSP	A D O	1 - 30	0,26 - 7,8	70	994	NO	1/2" BSP	1/2" BSP

UPON REQUEST AVAILABLE IN NPTF VERSION AND DISPLAY IN GALLON/QUARTER OR PINT

NEXT/2

FEATURES

- ADJUSTABLE UNIT OF MEASUREMENT
- EASY BATTERIES MAINTENANCE
- AAA STANDARD BATTERY
- SHOCK-ABSORBING PROTECTION
- ON-SITE CALIBRATION

The PIUSI NEXT/2 meter is an oval gear meter suitable for the delivery of low, medium and high viscosity oils. Its particular size allows the meter to count at high flow rates.

PERFORMANCE

UP TO **60 L/MIN** FLOW RATE	MAX **70BAR** OPERATING PRESSURE
± 0,5% ACCURACY	**0,2%** REPEATABILITY

NEXT/2

PACKAGING

CODE	WEIGHT		PACKAGING			
	KG	LBS	MM	INCH	PCS/PALLET	PCS/BOX
F00486150	0,6	1,3	115X160X135	4,5X6,3X5,3		1

CHART

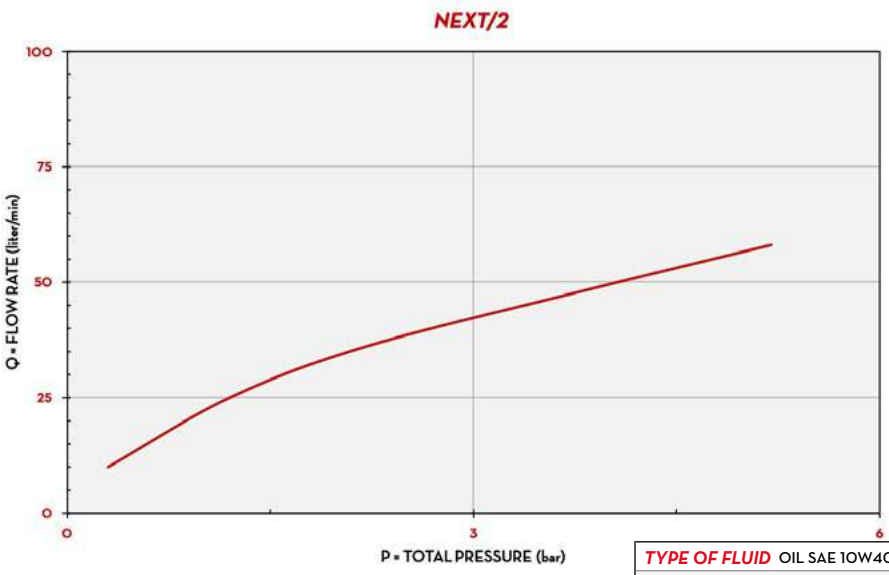

TYPE OF FLUID	OIL SAE 10W40
TEMPERATURE	23 °C

IN THE BOX

- NEXT/2 METER
- INSTRUCTION MANUAL

DETAILS

RESET BUTTON

OVAL GEAR

2 AAA BATTERIES INLCUDED

DIMENSIONS

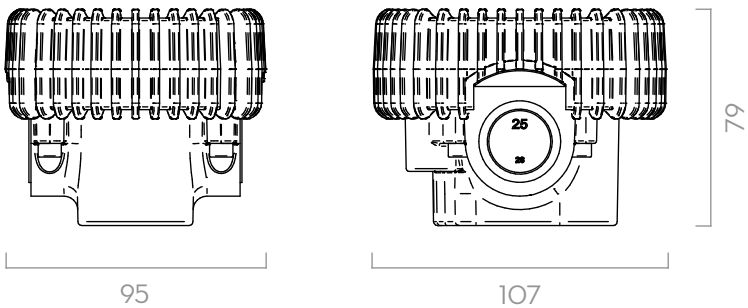

Dimensions expressed in millimeters

MATERIALS

- BODY: ALLUMINIUM
- GEARS: TECHNOPOLYMER

TECHNICAL DATA

CODE	DESCRIPTION	FLUIDS TYPE	FLOW RATE		WORKING PRESSURE		BATTERY INCLUDED	INLET	OUTLET
			L/MIN	GPM	BAR	PSI	AAA N°2 2X1,5 V		
FOO486150	NEXT 2 METER ¾" BSP	O	6 - 60	1,58 - 158	70	994	YES	3/4" BSP	3/4" BSP

K600/3

FEATURES

- ADJUSTABLE FLANGES
- EXTREMELY ACCURATE
- SUITABLE FOR INDUSTRIAL APPLICATIONS
- IDEAL FOR MOBILE INSTALLATIONS
- LOW ENERGY CONSUMPTIONS

The PIUSI K600/3 is an oval gear meter suitable for measuring the delivery of low, medium and high viscosity oils. The meter is equipped with an integrated filter and it is available also in pulser version.

PERFORMANCE

UP TO 100 L/MIN FLOW RATE	30-70BAR OPERATING PRESSURE
± 0,5% ACCURACY	0,2% REPEATABILITY

K600/3

K600/3 PULSER

PACKAGING

CODE	WEIGHT		PACKAGING			
	KG	LBS	MM	INCH	PCS/PALLET	PCS/BOX
METERS						
F00496A20	1,6	3,5	200X120X140	7,9X4,7X5,5		1
PULSER						
F00472A20	2	4,4	200X120X140	7,9X4,7X5,5		1

CHART

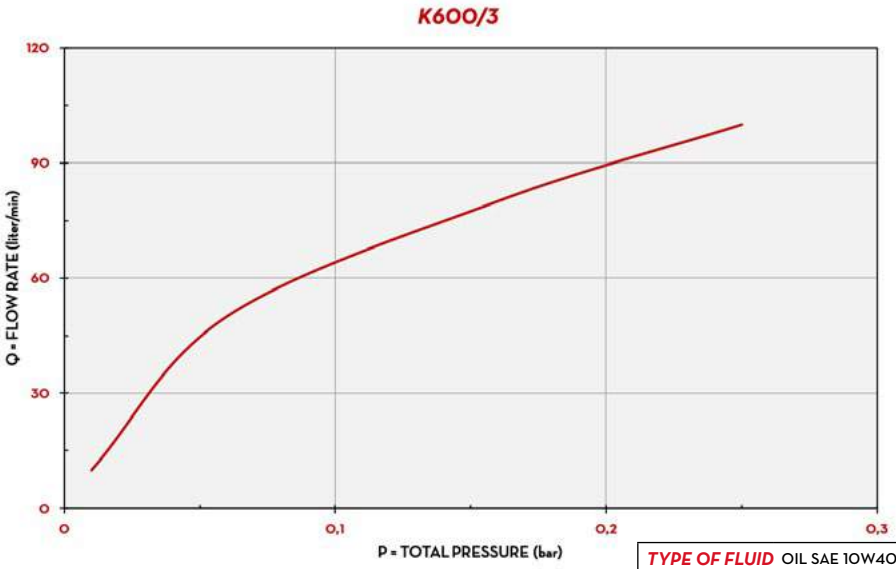

TYPE OF FLUID	OIL SAE 10W40
TEMPERATURE	20 °C

IN THE BOX

- K600/3 METER
- INSTRUCTION MANUAL

DETAILS

RESET / CALIBRATE BUTTON

OVAL GEAR

ALLUMINIUM BODY

DIMENSIONS

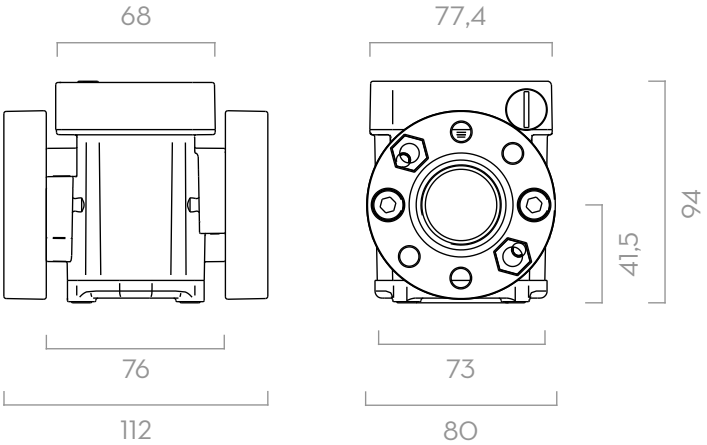

Dimensions expressed in millimeters

MATERIALS

- BODY: ALLUMINIUM
- GEARS: TECHNOPOLYMER

TECHNICAL DATA

CODE	DESCRIPTION	FLUIDS TYPE	FLOW RATE		WORKING PRESSURE		BATTERY INCLUDED	FLANGE	INLET OUTLET	INLET FILTER
			L/MIN	GPM	BAR	PSI	NO. 2 2X1,5V			
METER										
FO0496A20	K600/3 METER ¾" BSP OIL	A O	6 - 60	1,58 - 1,58	70	994	YES	YES	3/4" BSP	YES
PULSER										
FO0472A20	K600/3 PULSER ¾" BSP OIL	A O	6 - 60	1,58 - 1,58	70	994	NO	YES	3/4" BSP	YES

UPON REQUEST AVAILABLE IN NPTF VERSION AND DISPLAY IN GALLON/QUARTER OR PRINT

K600 B/3

FEATURES

- EASY-TO-READ BIG DISPLAY
- SWIVEL DISPLAY
- STANDARD BATTERY
- PULSE-OUT VERSION AVAILABLE
- ADJUSTABLE FLANGES
- AA STANDARD BATTERY

The PIUSI K600 B/3 is an oval gear meter suitable for monitoring the delivery of low, medium and high viscosity oils. This special version includes a large built-in digital display.

K600 B/3

K600 B/3 PULSE-OUT

PERFORMANCE

UP TO	MAX
100 L/MIN	70 BAR
FLOW RATE	OPERATING PRESSURE
± 0,5 %	0,2%
ACCURACY	REPEATABILITY

PACKAGING

CODE	WEIGHT		PACKAGING			
	KG	LBS	MM	INCH	PCS/PALLET	PCS/BOX
METERS						
F00491010	2	4,4	200X120X140	7,9X4,7X5,5		1
PULSE OUT METER						
F00492010	2	4,4	200X120X140	7,9X4,7X5,5		1

CHART

TYPE OF FLUID	OIL SAE 80W90
TEMPERATURE	20 °C

IN THE BOX

- K600 B/3 METER
- INSTRUCTION MANUAL

DETAILS

RESET BUTTON

OVAL GEAR

BIG DISPLAY

DIMENSIONS

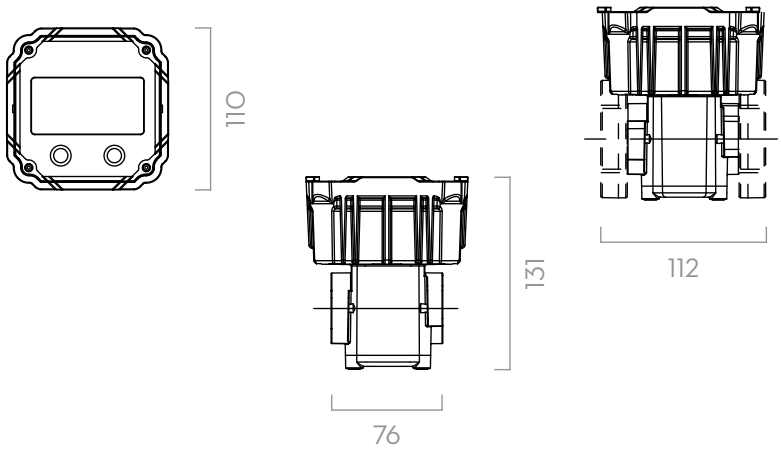

Dimensions expressed in millimeters

MATERIALS

- BODY: ALLUMINIUM
- GEARS: TECHNOPOLYMER

TECHNICAL DATA

CODE	DESCRIPTION	FLUIDS TYPE	FLOW RATE		WORKING PRESSURE		BATTERY INCLUDED	FLANGE	INLET OUTLET	INLET FILTER
			L/MIN	GPM	BAR	PSI	NO. 2 2X1,5V			
METERS										
F00491010	K600 B/3 ¾" BSP OIL	O	6 - 60	1,58 - 1,58	70	994	YES	YES	3/4" BSP	YES
PULSE OUT METER										
F00492010	K600 B/3 ¾" BSP OIL W/PULS OUT	O	6 - 60	1,58 - 1,58	70	994	YES	YES	3/4" BSP	YES

UPON REQUEST AVAILABLE IN NPTF VERSION AND DISPLAY IN GALLON/QUARTER OR PINT

K600/4

FEATURES

- ADJUSTABLE FLANGES
- INSTANTANEOUS READING
- EXTREMELY ACCURATE
- SUITABLE FOR INDUSTRIAL APPLICATIONS
- IDEAL FOR MOBILE INSTALLATIONS
- LOW ENERGY CONSUMPTION

The PIUSI K600/4 is an oval gear meter suitable for monitoring the delivery of low and medium viscosity oils. Its 4 couples of gears allows to reach high flow rates.

PERFORMANCE

UP TO 150 L/MIN	20 BAR
FLOW RATE	OPERATING PRESSURE
± 0,5 %	0,2%
ACCURACY	REPEATABILITY

K600/4

K600/4 PULSER

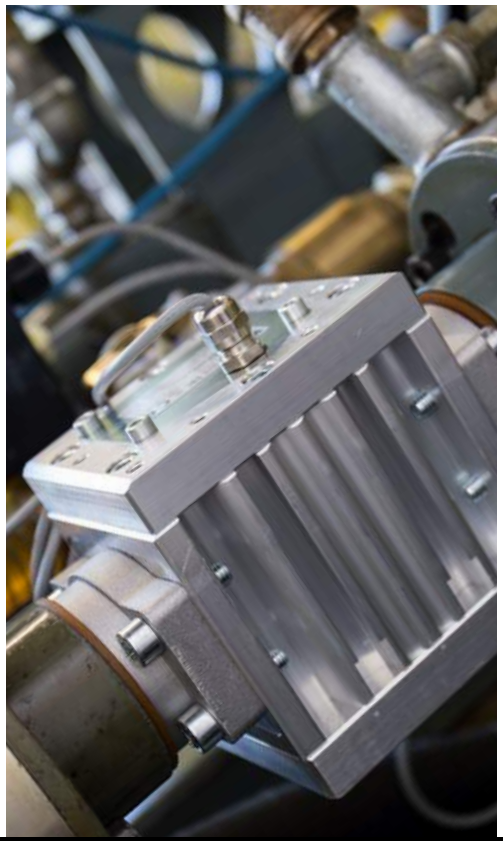

PACKAGING

CODE	WEIGHT		PACKAGING			
	KG	LBS	MM	INCH	PCS/PALLET	PCS/BOX
METER						
00049700A	3,2	7	200X120X140	7,9X4,7X5,5		1
PULSER						
000473000	3,2	7	200X120X140	7,9X4,7X5,5		1

CHART

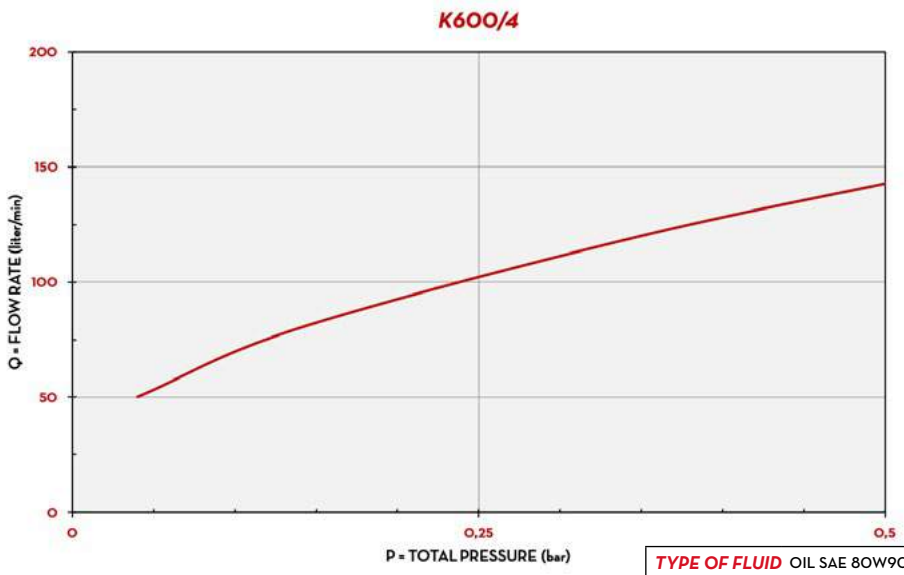

TYPE OF FLUID	OIL SAE 80W90
TEMPERATURE	20 °C

IN THE BOX

- K600/4 METER
- INSTRUCTION MANUAL

DETAILS

RESET / CALIBRATE BUTTON

OVAL GEAR

ALLUMINIUM BODY

MATERIALS

- BODY: ALLUMINIUM
- GEARS: TECHNOPOLYMER

DIMENSIONS

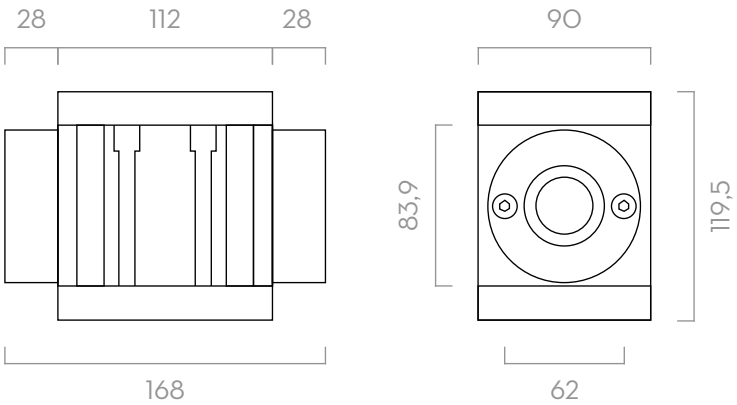

Dimensions expressed in millimeters

TECHNICAL DATA

CODE	DESCRIPTION	FLUIDS TYPE	FLOW RATE		WORKING PRESSURE		BATTERY INCLUDED	FLANGE	INLET OUTLET	INLET FILTER
			L/MIN	GPM	BAR	PSI	NO. 2 2X1,5V			
METER										
00049700A	K600/4 METER 1 ½" BSP	A O	15 - 150	3,9 - 39	20	284	YES	YES	1 1/2" BSP	YES
PULSER										
000473000	K600/4 PULSER 1 ½" BSP	A O	15 - 150	3,9 - 39	20	300	NO	YES	1 1/2" NPT	YES

UPON REQUEST AVAILABLE IN NPTF VERSION AND DISPLAY IN GALLON/QUARTER OR PINT

K200

FEATURES

- LOW FLOW RATE OPERATION
- CONSUMPTION MONITORING
- SMALL SIZE
- INLET FILTER
- DOSAGE SYSTEM
- HIGH PRESSURE RESISTANCE
- CALIBRATION FUNCTION
- COMPACT DESIGN

The PIUSI K200 meter is an oval gear meter suitable for measuring diesel, oil and grease. Its low flow rate count makes it also applicable to measure the fuel consumption in a system.

PERFORMANCE

UP TO 2,8 L/MIN	550 BAR
FLOW RATE	OPERATING PRESSURE
± 0,5 %	0,2%
ACCURACY	REPEATABILITY

K200 METER

K200 PULSER

K200 HP PULSER

PACKAGING

CODE	WEIGHT		PACKAGING			
	KG	LBS	MM	INCH	PCS/PALLET	PCS/BOX
METERS						
F0043012A	0,6	1,3	130X65X108	5,1X2,6X4,3		1
F0043011A	0,5	1,1	130X65X108	5,1X2,6X4,3		1
F0043023O	0,83	1,8	140X110X70			1
PULSER						
000452030	0,6	1,3	130X65X108	5,1X2,6X4,3		1
000452000	0,5	1,1	130X65X108	5,1X2,6X4,3		1
F0045206O	0,77	1,7	140X110X70	2,5X4,3X2,7		1

CHART

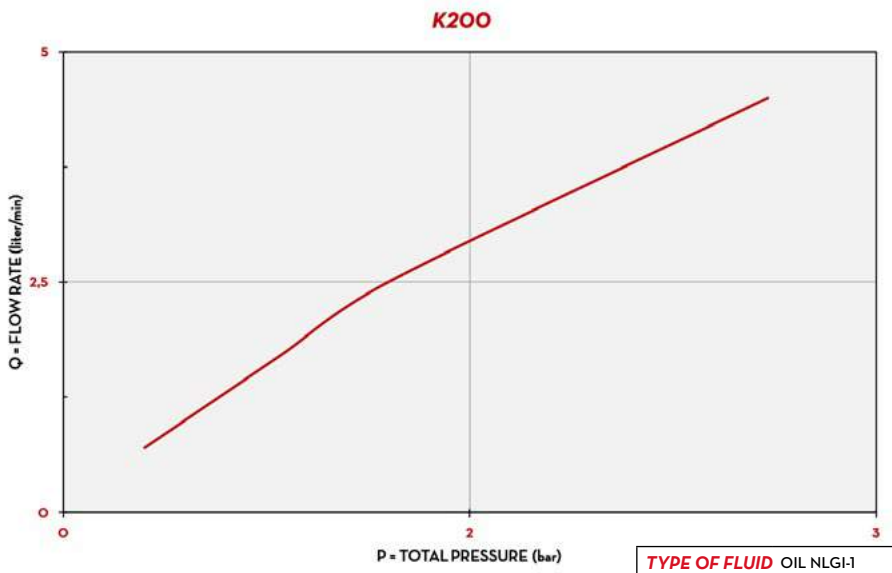

TYPE OF FLUID	OIL NLGI-1
TEMPERATURE	23 °C

IN THE BOX

- K200 METER
- INSTRUCTION MANUAL

DETAILS

RESET / CALIBRATE BUTTON

5 DIGIT DISPLAY

OVAL GEAR

2 AAA BATTERIES INLCUDED

DIMENSIONS

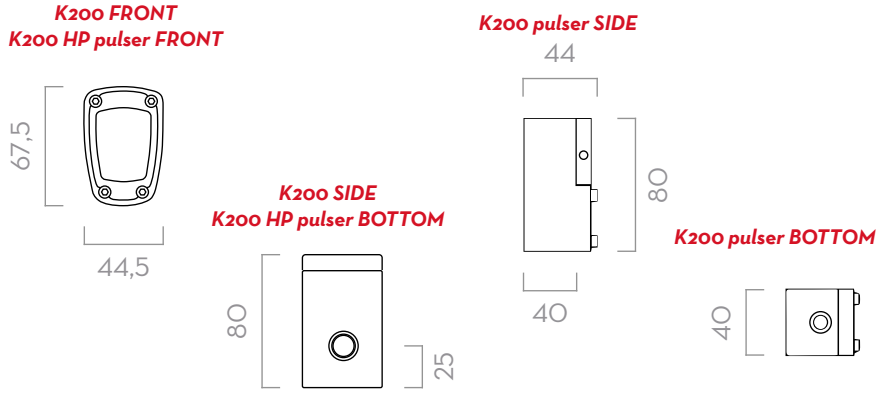

Dimensions expressed in millimeters

MATERIALS

- BODY: ALLUMINIUM
- GEARS: TECHNOPOLYMER

TECHNICAL DATA

CODE	DESCRIPTION	FLUIDS TYPE	FLOW RATE		WORKING PRESSURE		BATTERIES INCLUDED	INLET OUTLET
			KG/MIN	LB/MIN	BAR	PSI	AAA NO.2 2 X 1,5 V	
METERS								
F0043012A	K200 METER ML/L 1/8" BSP	D O G	0,1 - 2,5	0,2 - 5,5	500	7200	YES	1/8" BSP
F0043011A	K200 METER GR/KG 1/8" BSP	D O G	0,1 - 2,5	0,2 - 5,5	550	7200	YES	1/8" BSP
F0043023O	K200/2 METER GR/KG 1/4" BSP	D O G	0,2 - 5	0,4 - 11	700	10000	YES	1/4" BSP
PULSER								
000452030	K200 PULSER HP 1/8" BSP	D O G	0,1 - 2,5	0,2 - 5,5	1000	14500	NO	1/8" BSP
000452000	K200 PULSER 1/4" BSP	D O G	0,1 - 2,5	0,2 - 5,5	30	426	NO	1/4" BSP
F00452060	K200/2 PULSER 1/4" BSP	D O G	0,2 - 5	0,4 - 1,1	700	10000	NO	1/4" BSP

UPON REQUEST AVAILABLE IN NPTF VERSION AND DISPLAY IN GALLON/QUARTER OR PINT

REMOTE DISPLAY

FEATURES

- *LARGE SCREEN DISPLAY*
- *NON RESETTABLE TOTAL*
- *STANDARD BATTERY*

REMOTE DISPLAY for remote control (via max. 15 m. cable) of pulse meters. The large screen displays the quantity delivered and the non resettable total Equipped with software applications for calibrating meters. Available as both basic display device and as pulse emitter. Indispensable for receivers designed to recognise only discreet quantities of impulses. The easy interfacing management systems of the pulse transmitter models extend the field of application of pulse meters combined with remote displays.

PERFORMANCE

every	UP TO
PULSE METER	100 PULSES/LITER
COMPATIBILITY	FLOW RATE

REMOTE DISPLAY

PACKAGING

CODE	WEIGHT		PACKAGING		
	KG	LBS	MM	INCH	PCS/BOX
F117520OB	1,2	2,6	200X120X140	7,9X4,7X5,5	1
F117530OB	1,2	2,6	200X120X140	8,9X4,9X5,9	1
F117540OB	1,2	2,6	200X120X140	8,9X4,9X5,9	1
F0049501A	1,2	2,6	200X120X140	8,9X4,9X5,9	1
F0049502A	1,2	2,6	200X120X140	8,9X4,9X5,9	1
F0049503B	1,2	2,6	225X125X150	8,9X4,9X5,9	1

FUNCTIONING

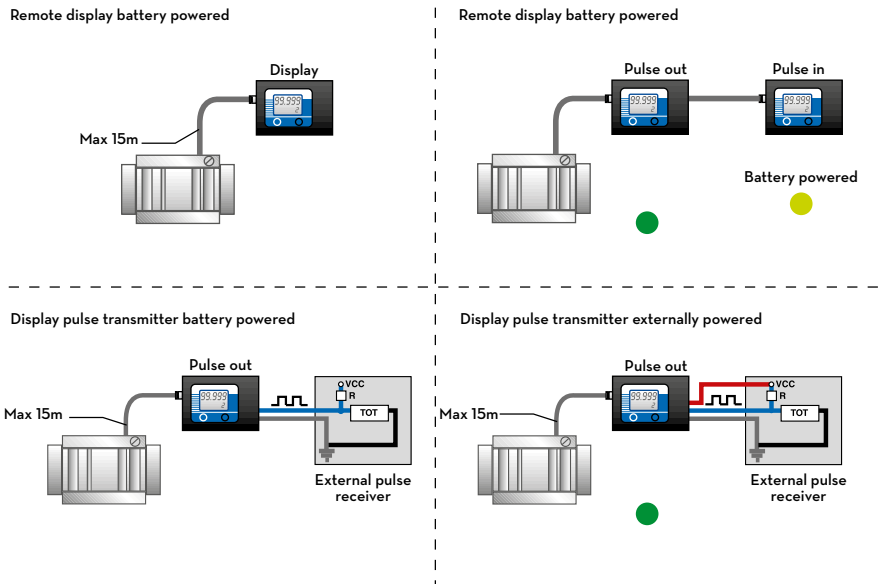

IN THE BOX

- REMOTE DISPLAY
- BRACKET
- INSTRUCTION MANUAL

DETAILS

5 DIGITS PARTIAL TOTAL

ADJUSTABLE BRACKET

DIMENSIONS

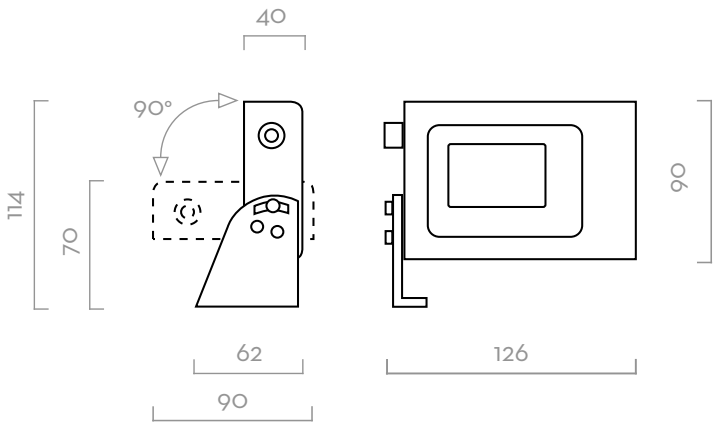

Dimensions expressed in millimeters

TECHNICAL DATA

CODE	DESCRIPTION	FLUIDS TYPE	FLANGE	INLET OUTLET
F117520OB	REMOTE DISPLAY PULSE OUT K60O	Ad B D O W W	K60O DIESEL	PULSE OUT
F117530OB	REMOTE DISPLAY PULSE OUT K60O/4	Ad B D O W W	K60O/4	PULSE OUT
F117540OB	REMOTE DISPLAY PULSE OUT K7OO	Ad B D O W W	K7OO	PULSE OUT
F0049501A	UNIVERSAL DISPLAY PULSE OUT	Ad B D O W W	K2OO, K4OO, K6OO OIL, K6OO DIESEL, K6OO/4, K7OO	PULSE OUT
F0049502A	DISPLAY PULSE IN	Ad B D O W W	FOR ALL PIUSI PULSE OUT REMOTE DISPLAY	PULSE IN
F0049503B	DISPLAY PULSE OUT ADBLUE®	Ad B D O W W	TURBINOX / K24 PULSER	PULSE OUT

REMOTE DISPLAY

K40

FEATURES

- SMALL SIZE
- NO BATTERY NEEDED
- EASY TO RESET
- NON RESETTABLE TOTALIZER
- SHOCK-ABSORBING PROTECTION
- IDEAL FOR MOBILE USE
- READY TO USE
- PARTIAL AND FULL TOTALIZER
- VERSATILE

The PIUSI K40 is a mechanical oval gear meter suitable for medium/high viscosity oils, without any need for calibration. It's the simplest way to measure a wide range of lubricants.

PERFORMANCE

UP TO 30 L/MIN	MAX 70 BAR
FLOW RATE	OPERATING PRESSURE
± 1 %	0,2%
ACCURACY	REPEATABILITY

K40

PACKAGING

CODE	WEIGHT		PACKAGING			N. BOXES/ EUROPALLET	
	KG	LBS	MM	PCS/PALLET	PCS/BOX	✈	🚢
F00490020	0,78	1,7	160X115X135		1	126	144

CHART

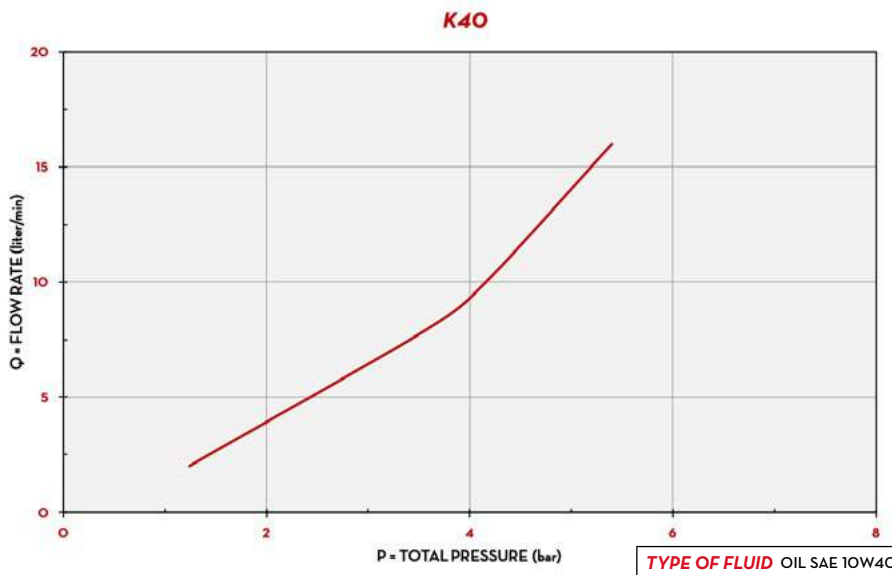

TYPE OF FLUID	OIL SAE 10W40
TEMPERATURE	23 °C

IN THE BOX

- K40 METER
- INSTRUCTION MANUAL

DETAILS

MECHANICAL COUNTER

TOTAL PARTIAL RESETTING

OVAL GEAR

MATERIALS

- BODY: ALLUMINIUM
- GEARS: TECHNOPOLYMER

DIMENSIONS

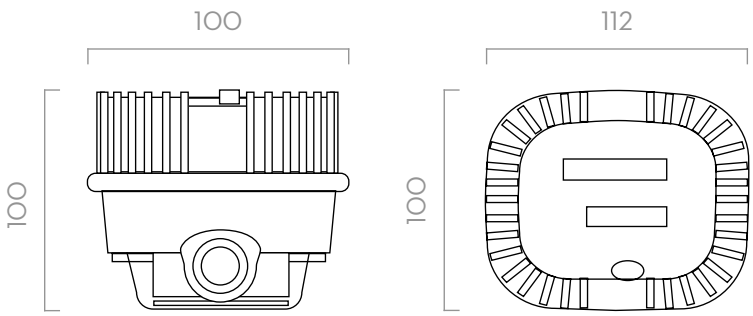

Dimensions expressed in millimeters

TECHNICAL DATA

CODE	DESCRIPTION	FLUIDS TYPE	FLOW RATE		WORKING PRESSURE		INLET	OUTLET
			L/MIN	GPM	BAR	PSI		
F00490020	K40 METER ½" BSP	O	1 - 30	0,26 - 7,8	70	994	1/2" BSP	1/2" BSP

UPON REQUEST AVAILABLE IN NPTF VERSION AND DISPLAY IN GALLON/QUARTER OR PINT

K33 / K44

FEATURES

- *READY TO USE*
- *INDUSTRIAL DESIGN*
- *NO BATTERY NEEDED*
- *EASY TO RESET*
- *VERSATILE*

The PIUSI K33 and K44 are the best seller mechanical meters in this market. Reliable, easy to install and to calibrate, they are equipped with a nutating disk that allows them to be installed in all four flow directions. The display is available in both three or four digits, according to the model chosen.

PERFORMANCE

UP TO **120 L/MIN**	UP TO **30 BAR**
FLOW RATE	BURSTING PRESSURE
± 3%	**0,2%**
ACCURACY	REPEATABILITY

K33

K44

PACKAGING

CODE	WEIGHT		PACKAGING			
	KG	LBS	MM	INCH	PCS/PALLET	PCS/BOX
K33 METER						
000550160	0,6	1,3	180X180X170		-	1
000551160	0,6	1,3	180X180X170		-	1
000557000	0,6	1,3	180X180X170		-	1
000558000	0,6	1,3	180X180X170		-	1
K44 METER						
000560160	0,6	1,3	180X180X170		-	1
000561020	0,6	1,3	180X180X170		-	1
000562020	0,6	1,3	180X180X170		-	1
000563020	0,6	1,3	180X180X170		-	1

CHART

IN THE BOX

- K33 / K44 METER
- INSTRUCTION MANUAL

DETAILS

NUTATING DISK SYSTEM

4 FLOW DIRECTIONS

MECHANICAL COUNTER

MATERIALS

- NUTATING DISK CHAMBER: TECHNOPOLYMER
- BODY: ALLUMINIUM

DIMENSIONS

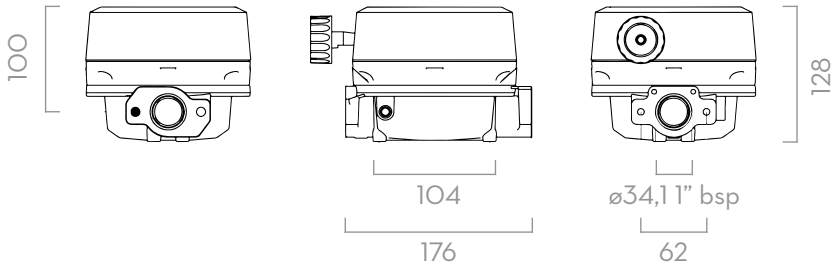

Dimensions expressed in millimeters

TECHNICAL DATA

CODE	DESCRIPTION	FLUIDS TYPE	FLOW DIRECTION	FLOW RATE		WORKING PRESSURE		PULSER	INLET OUTLET
				L/MIN	GPM	BAR	PSI	P/L (P/GAL)	
K33 METER									
000550160	K33 VER. A	O	←	20-120	5-32	10	142	YES	1" BSP
000551160	K33 VER. B	O	↑	20-120	5-32	10	142	YES	1" BSP
000557000	K33 VER. C	O	↓	20-120	5-32	10	142	YES	1" BSP
000558000	K33 VER. D	O	→	20-120	5-32	10	142	YES	1" BSP
K44 METER									
000560160	K44 VER. A	O	←	20-120	5-32	10	142	YES	1" BSP
000561020	K44 VER. B	O	↑	20-120	5-32	10	142	YES	1" BSP
000562020	K44 VER. C	O	↓	20-120	5-32	10	142	YES	1" BSP
000563020	K44 VER. D	O	→	20-120	5-32	10	142	YES	1" BSP

UPON REQUEST AVAILABLE IN NPTF VERSION AND DISPLAY IN GALLON/QUARTER OR PINT

METERS ACCESSORIES

ELECTRONIC METERS

K400	CODE	DESCRIPTION
	F0049501A	REMOTE DISPLAY PULS OUT UNIVERSAL
	F0049502A	UNIVERSAL REMOTE DISPLAY PULS IN

F0049501A
F0049502A

K600/3	CODE	DESCRIPTION
	F0049501A	REMOTE DISPLAY PULS OUT UNIVERSAL
	F0049502A	UNIVERSAL REMOTE DISPLAY PULS IN
	F1175200B	REMOTE DISPLAY PULS OUT K600 LT SEL
	F1444500A	KIT FLANGE 3/4IN GAS

F0049501A
F0049502A
F1175200B

F1444500A

K600 B/3	CODE	DESCRIPTION
	F1444500A	KIT FLANGE 3/4IN GAS

F1444500A

K600/4	CODE	DESCRIPTION
	F0049501A	REMOTE DISPLAY PULS OUT UNIVERSAL
	F0049502A	UNIVERSAL REMOTE DISPLAY PULS IN
	F1175300B	REMOTE DISPLAY PULS OUT K600/4 LT SEL

F0049501A
F0049502A
F1175300B

K200	CODE	DESCRIPTION
	F0049501A	REMOTE DISPLAY PULS OUT UNIVERSAL
	F0049502A	UNIVERSAL REMOTE DISPLAY PULS IN

F0049501A
F0049502A

ATTENTION
TRAILER SERVICE CHECKLIST
VISUAL INSPECTION
U BOLTS & WHEEL NUTS TO BE TORQUED
0000
PIUSI

METERED NOZZLES

EASY K400

FEATURES

- READY TO USE
- EASY TO CALIBRATE
- DOUBLE TOTALIZER
- ELECTRONIC RESET FUNCTION
- HIGH ACCURACY
- ERGONOMIC GRAB
- LOW BATTERY CONSUMPTION
- IP65 PROTECTION
- RUBBER PROTECTION
- ADJUSTABLE UMA CAMSHAFT
- SWIVEL

The PIUSI EASY K400 is the perfect synthesis for all the needs of trasferring and measuring oils. It is composed by the ergonomic EASY OIL nozzle and the K400 meter.

EASY K400 WITH FLEXIBLE SPOUT

with rigid spout

without spout

PERFORMANCE

UP TO 30 L/MIN FLOW RATE	70 BAR OPERATING PRESSURE
± 0,5% ACCURACY	UP TO 2000 CST VISCOSITY

PACKAGING

CODE	WEIGHT		PACKAGING			N. BOXES/ EUROPALLET	
	KG	LBS	MM	PCS/PALLET	PCS/BOX		
F00984040	1,2	2,6	300X160X110		1	180	180
F00984010	1,5	3.3	300X160X110		1	180	180
F00984000	1,5	3,3	300X160X110		1	180	180
F00984070	1,5	3,3	300X160X110		1	180	180
F00984060	1,5	3,3	300X160X110		1	180	180

CHART

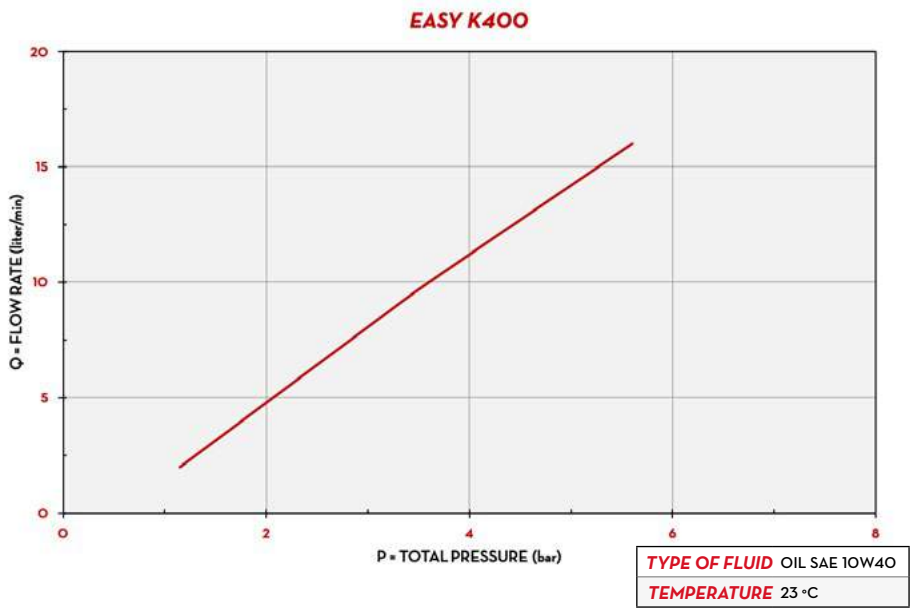

TYPE OF FLUID	OIL SAE 10W40
TEMPERATURE	23 °C

IN THE BOX

- EASY OIL NOZZLE
- K400 METER
- INSTRUCTION MANUAL

DETAILS

RESET/CALIBRATE BUTTON

MULTIFUNCTIONAL DISPLAY

METER WITH OVAL GEARS

2 AAA BATTERIES INCLUDED

DIMENSIONS

EASY K400 METER SIDE/FRONT

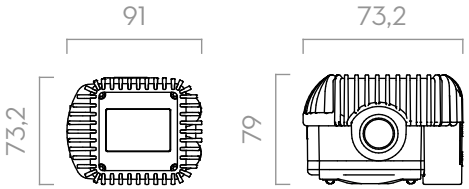

EASY K400 NOZZLE METER SIDE

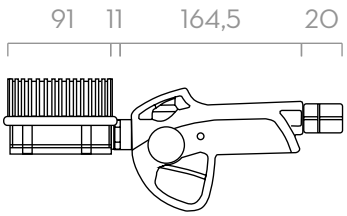

RIGID / FLEXIBLE SPOUT

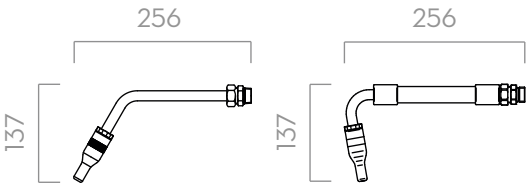

Dimensions expressed in millimeters

MATERIALS

- NOZZLE BODY: ALLUMINIUM
- VALVE: NBR, NICKEL PLATED STEEL, BRASS
- METER BODY: ALLUMINIUM
- GEARS: TECHNOPOLYMER

TECHNICAL DATA

CODE	DESCRIPTION	FLUIDS TYPE	SPOUT TYPE	AUTOMATIC NO DRIP VALUE	FLOW RATE		WORKING PRESSURE		BATTERIES 1,5 V	INLET	OUTLET
					L/MIN	GPM	BAR	PSI	SIZE AAA NO.		
F00984040	EASY K400 ½" BSP W/O SPOUT	O	-	-	1 - 30	0,26 - 7,8	70	994	2	1/2" BSP	1/2" BSP
F00984010	EASY K400 ½" BSP W/FLEX SPOUT HP	O	FLEXIBLE AP	YES	1 - 30	0,26 - 7,8	70	994	2	1/2" BSP	FLEX EXT.
F00984000	EASY K400 ½" BSP W/RIGID SPOUT HP	O	RIGID AP	YES	1 - 30	0,26 - 7,8	70	994	2	1/2" BSP	RIGID EXT.
F00984070	EASY K400 ½" BSP W/FLEX SPOUT LP	O	FLEXIBLE BP	YES	1 - 30	0,26 - 7,8	70	994	2	1/2" BSP	FLEX EXT.
F00984060	EASY K400 ½" BSP W/RIGID SPOUT LP	O	RIGID BP	YES	1 - 30	0,26 - 7,8	70	994	2	1/2" BSP	RIGID EXT.

NPT VERSION AVAILABLE - QUART, PINT, GALLON VERSION AVAILABLE. APPROVABLE VERSION ON REQUEST

EASY NEXT/2

FEATURES

- HIGH RATIO PRESSURE
- LOW PRESSURE DROP
- STURDY AND DURABLE
- BUILT-IN LEVER LOCK
- READY TO USE
- EASY TO CALIBRATE
- ELECTRONIC RESET FUNCTION
- LOW BATTERY CONSUMPTION
- IP65 PROTECTION
- RUBBER PROTECTION
- ADJUSTABLE UMA CAMSHAFT
- SWIVEL

The PIUSI EASY NEXT/2 is the answer to all the needs of a high flow rate oil dispense and measure. It is composed by the PISTOL-ONE nozzle and the oval gear meter NEXT/2.

PERFORMANCE

UP TO 60 L/MIN FLOW RATE	± 0,5% ACCURACY
70 BAR OPERATING PRESSURE	UP TO 2000 CST VISCOSITY

EASY NEXT/2 WITH FLEXIBLE SPOUT

with rigid spout

without spout

PACKAGING

CODE	WEIGHT		PACKAGING			N. BOXES/ EUROPALLET	
	KG	LBS	MM	PCS/PALLET	PCS/BOX		
F00974000	2,3	5,1	115X135X160		1	100	120
F00974010	2,9	6,4	115X135X160		1	100	120
F00974020	3	6,6	115X135X160		1	100	120

CHART

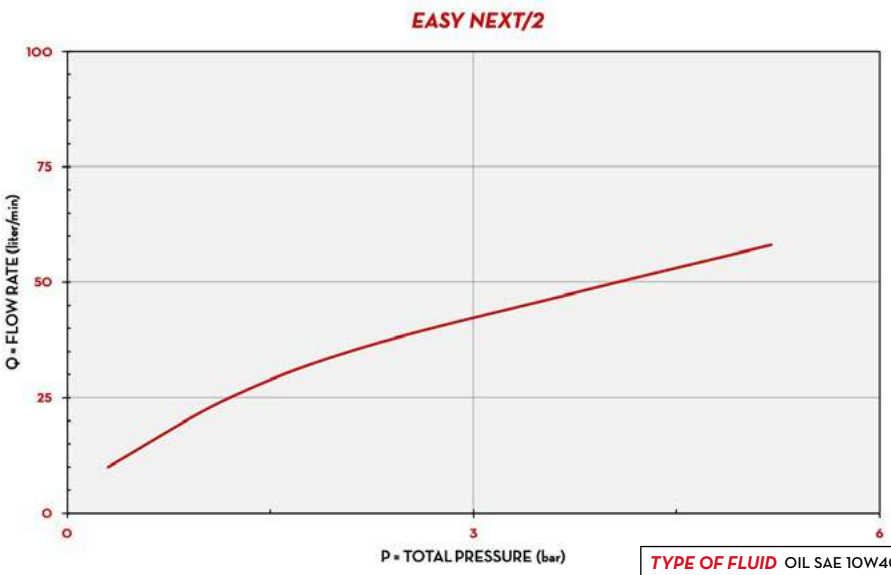

TYPE OF FLUID	OIL SAE 10W40
TEMPERATURE	23 °C

IN THE BOX

- PISTOL-ONE NOZZLE
- NEXT/2 METER
- INSTRUCTION MANUAL

DETAILS

RESET BUTTON

SELECTED MATERIAL

MULTIFUNCTIONAL DISPLAY

METER WITH OVAL GEARS

DIMENSIONS

EASY NEXT/2 NOZZLE METER SIDE

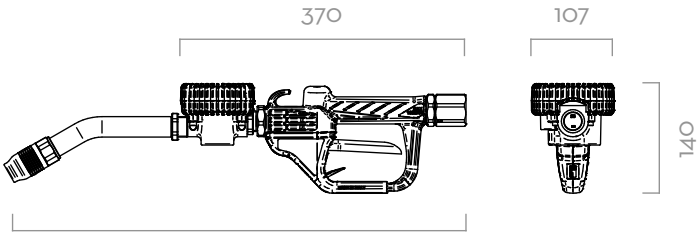

RIGID / FLEXIBLE SPOUT

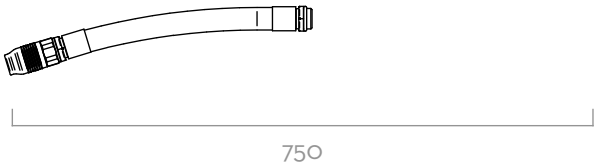

Dimensions expressed in millimeters

MATERIALS

- NOZZLE BODY: ALLUMINIUM
- VALVE: NBR, NICKEL PLATED STEEL,BRASS
- METER BODY: ALLUMINIUM
- GEARS: TECHNOPOLYMER

TECHNICAL DATA

CODE	DESCRIPTION	FLUIDS TYPE	SPOUT TYPE	SEMI AUTOMATIC NO DRIP VALUE	FLOW RATE		WORKING PRESSURE		BATTERY INCLUDED	INLET	OUTLET
					L/MIN	GPM	BAR	PSI	AAA NO. 2 2 X 1,5 V		
F00974000	EASY NEXT/2 ¾" BSP W/O SPOUT	O	-	-	6 - 60	1,5 - 15	70	994	2	3/4" BSP	-
F00974010	EASY NEXT/2 ¾" BSP W/RIGID SPOUT	O	RIGID	YES	6 - 60	1,5 - 15	70	994	2	3/4" BSP	RIGID EXT.
F00974020	EASY NEXT/2 ¾" BSP W/FLEX SPOUT	O	FLEXIBLE	YES	6 - 60	1,5 - 15	70	994	2	3/4" BSP	FLEX EXT.

K500

FEATURES

- PRESET FUNCTION
- HIGH ACCURACY
- STANDARD BATTERY AA
- ERGONOMIC GRAB
- ROTATING SPOUT
- SHOCK-ABSORBING PROTECTION
- IP55 PROTECTION
- ADJUSTABLE UNIT OF MEASUREMENT

The PIUSI K500 is the most widespread preset nozzle for oil. It has an ergonomic handle, an oval gear meter and a preset function to always choose the right quantity before dispensing.

K500

PERFORMANCE

UP TO 30 L/MIN FLOW RATE	70 BAR OPERATING PRESSURE
± 0,5% ACCURACY	UP TO 2000 CST VISCOSITY

A

ROTATING SPOUT
R12519000
PAG. 96

B

FLEXIBLE SPOUT
F00676070
PAG. 96

C

RIGID SPOUT
F00676080
PAG. 96

PACKAGING

CODE	WEIGHT		PACKAGING			N. BOXES/ EUROPALLET	
	KG	LBS	MM	PCS/PALLET	PCS/BOX		
F006870OD	1,8	4	280X160X140		1	128	160
F006872OA	1,8	4	280X160X140		1	128	160
F006872 1A	1,8	4	280X160X140		1	128	160

CHART

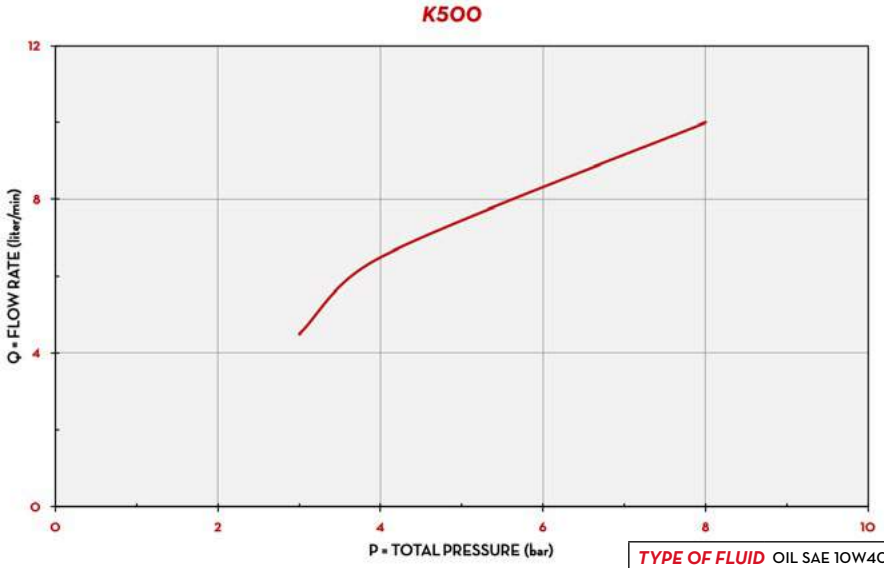

TYPE OF FLUID	OIL SAE 10W40
TEMPERATURE	23 °C

IN THE BOX

- K500 NOZZLE
- INSTRUCTION MANUAL

DETAILS

EASY PRESET QUANTITY

HIGH PROTECTION

METER WITH OVAL GEARS

BATTERY COMPARTMENT

DIMENSIONS

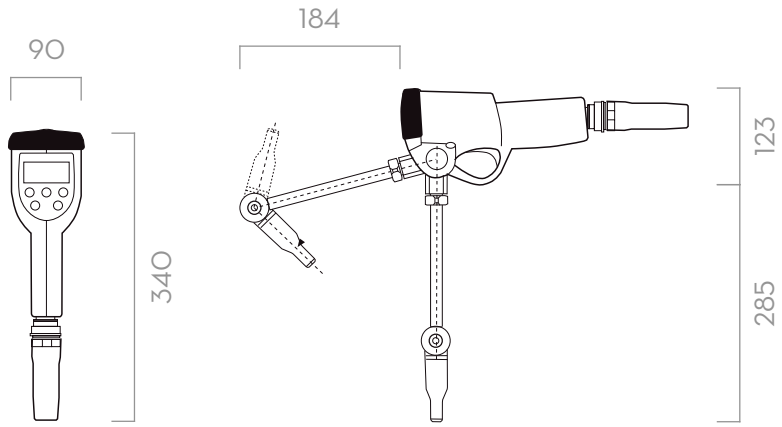

Dimensions expressed in millimeters

MATERIALS

- NOZZLE BODY: ALLUMINIUM
- VALVE: NBR, NICKEL PLATED STEEL, BRASS
- METER BODY: ALLUMINIUM
- GEARS: TECHNOPOLYMER

TECHNICAL DATA

CODE	DESCRIPTION	FLUIDS TYPE	SPOUT TYPE	AUTOMATIC NO DRIP VALUE	FLOW RATE		WORKING PRESSURE		BATTERIES	INLET
					L/MIN	GPM	BAR	PSI	SIZE 1,5 V AA NO.	
F0068700D	K500 PRESET NOZZLE ½" BSP W/ROT SPOUT	O	A	YES	1 ÷ 30	0,26 ÷ 7,8	70	994	4	1/2" BSP
F0068720A	K500 PRESET NOZZLE ½" BSP W/RIGID SPOU	O	C	YES	1 ÷ 30	0,26 ÷ 7,8	70	994	4	1/2" BSP
F0068721A	K500 PRESET NOZZLE ½" BSP W/FLEX SPOUT	O	B	YES	1 ÷ 30	0,26 ÷ 7,8	70	994	4	1/2" BSP

EASY K40

FEATURES

- NO CALIBRATION REQUIRED
- EASY TO RESET
- PARTIAL AND FULL TOTALIZER
- NON RESETTABLE TOTALIZER
- NO BATTERY NEEDED
- MECHANICAL RESET BUTTON
- SWIVEL

The PIUSI EASY K40 is the simplest solution for the delivery and measuring of oil. It is composed by the ergonomic EASY OIL nozzle and the K40 meter.

PERFORMANCE

UP TO 30 L/MIN FLOW RATE	70 BAR OPERATING PRESSURE
± 1% ACCURACY	UP TO 2000 CST VISCOSITY

EASY K40 WITH FLEXIBLE SPOUT

with rigid spout

without spout

PACKAGING

CODE	WEIGHT		PACKAGING			N. BOXES/ EUROPALLET	
	KG	LBS	MM	PCS/PALLET	PCS/BOX	✈	🚢
F00973000	1,23	2,7	345X165X120		1	126	144
F00973020	1,53	3,4	345X165X120		1	126	144
F00973030	1,53	3,4	345X165X120		1	126	144

CHART

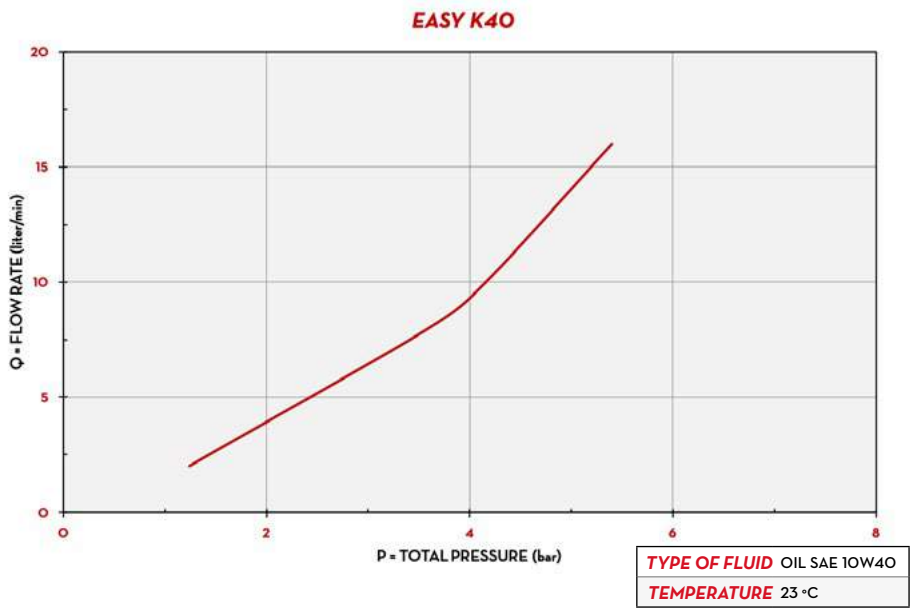

TYPE OF FLUID	OIL SAE 10W40
TEMPERATURE	23 °C

IN THE BOX

- EASY OIL NOZZLE
- K40 METER
- INSTRUCTION MANUAL

DETAILS

RESET BUTTON

MECHANICAL COUNTER

METER WITH OVAL GEARS

SELECTED MATERIALS

MATERIALS

- NOZZLE BODY: ALLUMINIUM
- VALVE: NBR, NICKEL PLATED STEEL, BRASS
- METER BODY: ALLUMINIUM
- GEARS: TECHNOPOLYMER

DIMENSIONS

EASY K400 METER SIDE/FRONT

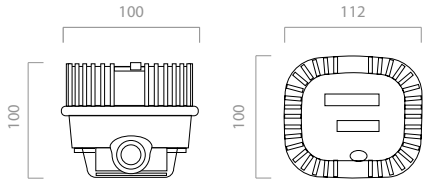

EASY K400 NOZZLE METER SIDE

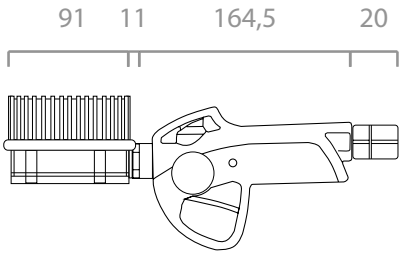

RIGID / FLEXIBLE SPOUT

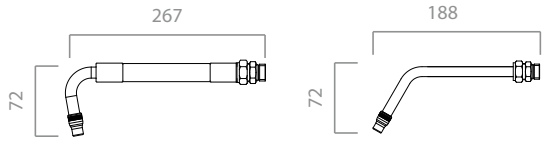

Dimensions expressed in millimeters

TECHNICAL DATA

CODE	DESCRIPTION	FLUIDS TYPE	SPOUT TYPE	AUTOMATIC NO DRIP VALUE	FLOW RATE		WORKING PRESSURE		INLET	OUTLET
					L/MIN	GPM	BAR	PSI		
F00973000	EASY K40 ½" BSP W/O SPOUT	O	-	-	1 - 30	0,26 - 7,8	70	994	1/2" BSP	1/2" BSP
F00973020	EASY K40 ½" BSP W/FLEX SPOUT LP	O	FLEXIBLE	YES	1 - 30	0,26 - 7,8	70	994	1/2" BSP	EXT. FLEX
F00973030	EASY K40 ½" BSP W/RIGID SPOUT LP	O	RIGID	YES	1 - 30	0,26 - 7,8	70	994	1/2" BSP	EXT. RIGID

GREASTER

FEATURES

- HIGH PRESSURE
- SMALL SIZE
- EASY TO CALIBRATE
- STANDARD BATTERY AAA
- DOUBLE TOTALIZER
- BUILT-IN LEVER LOCK
- ADJUSTABLE UMA
- SWIVEL

The GREASTER is the well known PIUSI answer to all the needs of measuring grease with a nozzle. Besides a handly grab this nozzle comes with a built in version of the PIUSI K200 meter.

GREASTER

PERFORMANCE

UP TO	MAX
2,5 KG/MIN	550 BAR
FLOW RATE	OPERATING PRESSURE

± 3%

ACCURACY

PACKAGING

CODE	WEIGHT		PACKAGING			
	KG	LBS	MM	INCH	PCS/PALLET	PCS/BOX
F0043000A	2,3	5,1	310X170X55	12,2X6,7X2,2		1
F0043002A	2,6	5,7	310X170X55	12,2X6,7X2,2		1
F0043100A	2,3	5,1	310X170X55	12,2X6,7X2,2		1
F0043600A	0,5	1,1	310X170X55	12,2X6,7X2,2		1

CHART

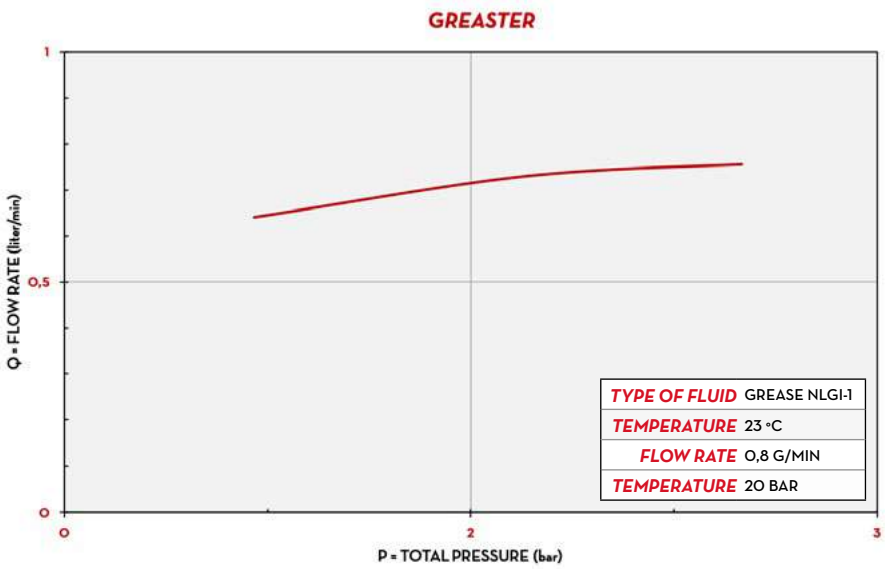

IN THE BOX

- GREASTER NOZZLE
- INSTRUCTION MANUAL

DETAILS

RESET/CALIBRATE BUTTON

METER WITH OVAL GEARS

MULTIFUNCTION DISPLAY

DIMENSIONS

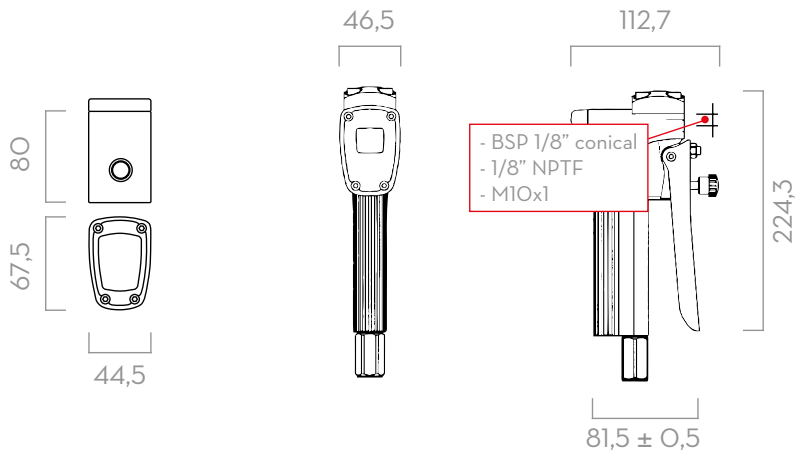

Dimensions expressed in millimeters

MATERIALS

- NOZZLE BODY: ALLUMINIUM
- VALVE: STEEL
- METER BODY: ALLUMINIUM
- GEARS: TECHNOPOLYMER

TECHNICAL DATA

CODE	DESCRIPTION	FLUIDS TYPE	RIGID SPOUT	Z SWIVEL	BATCH TOTAL	CUMULATIVE TOTAL	FLOW RATE		WORKING PRESSURE		INLET	OUTLET
							KG/MIN	LB/MIN	BAR	PSI		
F0043000A	GREASTER 1/4" BSP GR/KG W/O SPOUT	G	-	-	GR	KG	0,1 - 2,5	0,2 - 5,5	550	-	1/4" BSP	1/8" BSP
F0043002A	GREASTER 1/4" BSP GR/KG - M10X1 OUT	G	-	-	GR	KG	0,1 - 2,5	0,2 - 5,5	550	-	1/4" BSP	M 10X1
F0043100A	GREASTER 1/4" BSP GR/KG W/RIGID SPOUT	G	YES	YES	GR	KG	0,1 - 2,5	0,2 - 5,5	550	-	1/4" BSP	M 10X1
F0043600A	GREASTER 1/4" NPT OZ/LB W/RIGID SPOUT	G	-	-	GR	KG	0,1 - 2,5	0,2 - 5,5	550	-	1/8" BSP	1/8" BSP

UPON REQUEST AVAILABLE IN OZ/LB VERSION

K24 SUZZARABLUE MANUAL NOZZLE EASY K400 WINDSCREEN

FEATURES

- *READY TO USE*
- *ERGOMOMIC GRAB*
- *LOW WEIGHT*

The K24 SUZZARABLUE MANUAL NOZZLE and PIUSI EASY WINDSCREEN are manual nozzles suitable for the delivery of antifreeze and windscreen washing liquid. They comes with the plastic version (SUZZARABLUE) or windscreen version (EASY K400) of the K24 meter.

PERFORMANCE

UP TO **80 L/MIN** FLOW RATE	**3,4-25 BAR** OPERATING PRESSURE
± 1% K24 VERSION ACCURACY	**± 0,5%** K400 VERSION ACCURACY

K24 SUZZARABLUE MANUAL NOZZLE

EASY K400 WINDSCREEN

PACKAGING

CODE	WEIGHT		PACKAGING			
	KG	LBS	MM	INCH	PCS/PALLET	PCS/BOX
METERED NOZZLES						
F00870020	1	2,2	300X390X260	11,8X15,4X10,2	-	1
F00976W0A	0,95	2,1	300X390X260	11,8X15,4X10,2	-	1

CHART

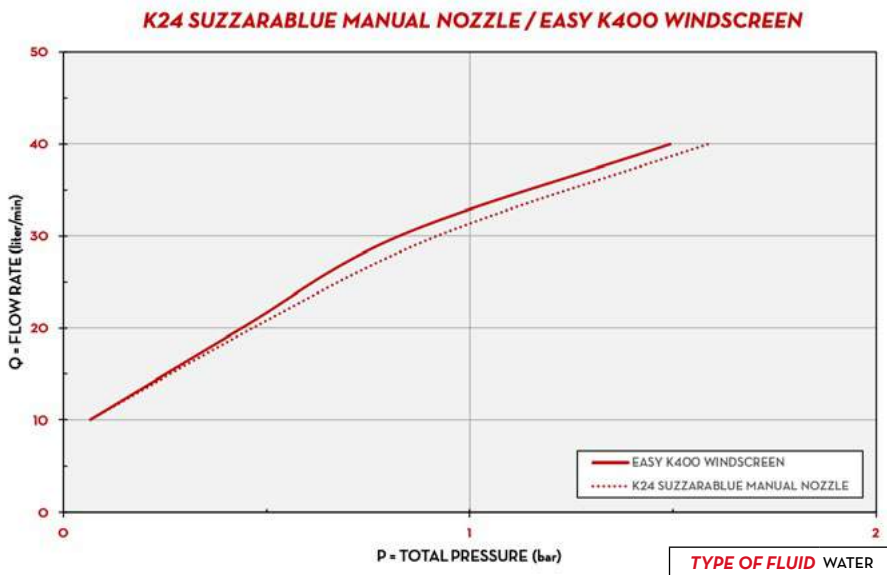

TYPE OF FLUID	WATER
TEMPERATURE	23°C

IN THE BOX

- MANUAL NOZZLE
- K24 / K400 METER
- INSTRUCTION MANUAL

DETAILS

AVAILABLE WITH K24

METER WITH OVAL GEARS

DIMENSIONS

K24 SUZZARABLUE MANUAL NOZZLE

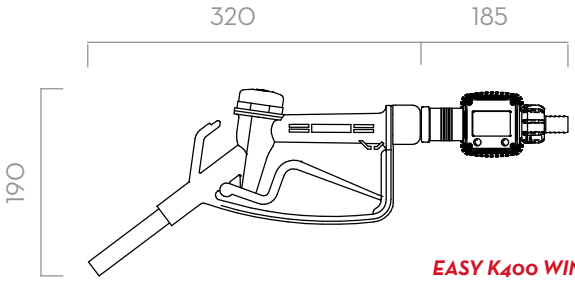

EASY K400 WINDSCREEN

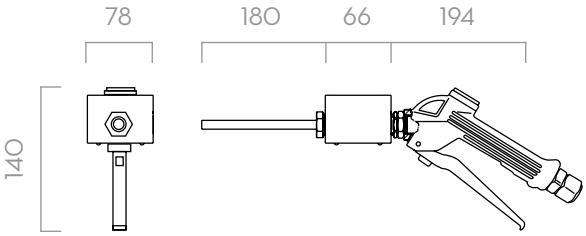

Dimensions expressed in millimeters

MATERIALS

- NOZZLE BODY: TECHNOPOLYMER
- VALVE: VITON
- METER BODY: ALLUMINIUM
- GEARS: TECHNOPOLYMER

TECHNICAL DATA

CODE	DESCRIPTION	FLUIDS TYPE	FLOW RATE		WORKING PRESSURE		BATTERIES	INLET	OUTLET
			L/MIN	GPM	BAR	PSI	V		
METERED NOZZLES									
F00870020	K24 SUZZARABLUE MANUAL NOZZLE	W A	5 - 80	1,3 - 21	3,4	49	2	-	-
F00976W0A	EASY K400 WINDSCREEN	W A	1 - 30	0,3 - 8	25	362	2	1/2 BSP	-

K24 SUZZARABLUE / EASY K400 WINDSCREEN

METERED NOZZLE ACCESSORIES

METERED NOZZLES

EASY K400	CODE	DESCRIPTION
	000934000	RIGID SPOUT W\MAN ANTI-DRIP VALVE HF
	000935000	FLEX SPOUT W\MAN ANTI-DRIP VALVE HF
	000938000	RIGID SPOUT W\MAN ANTI-DRIP VALVE LF
	F00660000	AUTO ANTI-DRIP VALVE HP
	F00665000	RIGID SPOUT W\AUTO ANTI-DRIP VALVE HP
	F00666000	FLEX SPOUT W\AUTO ANTI-DRIP VALVE
	F0067000A	RIGID SPOUT W\AUTO ANTI-DRIP VALVE LP
	F0067002A	RIGID SPOUT SHORT B/P
	F0067100A	FLEX SPOUT W\AUTO ANTI-DRIP VALVE LP
	F00690000	MAN ANTI-DRIP VALVE GAS 1/4IN LF
	F00691000	MAN ANTI-DRIP VALVE BSP 1/2IN HF§
	F00695000	MAN ANTI-DRIP VALVE GAS 3/8IN HF§
	F00939000	FLEX SPOUT W\MAN ANTI-DRIP VALVE LF
	F0845600A	SWIVEL 12.12
	F09659000	SWIVEL PROTECTION - BLACK
	F09757000	SWIVEL PROTECTION - YELLOW
	F09758000	SWIVEL PROTECTION - GREEN
	F09899000	SWIVEL PROTECTION - RED
	F09949000	EASY OIL FILTER 11.8X80
	F09955000	SWIVEL PROTECTION - BLUE
	F10696000	SWIVEL PROTECTION - WHITE

F00665000 F0067000A F0067002A 000934000 000938000

F00666000 F0067100A 000935000 F00939000

F00690000 F00691000 F00695000 F00660000

F09949000 F0845600A

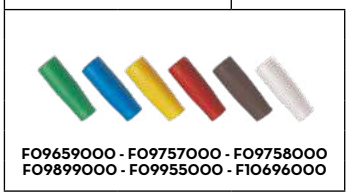

F09659000 - F09757000 - F09758000
F09899000 - F09955000 - F10696000

EASY NEXT/2	CODE	DESCRIPTION
	F1600501A	RIGID SPOUT PISTOL-ONE
	F1600401A	FLEXIBLE SPOUT PISTOL-ONE

F1600501A F1600401A

K500	CODE	DESCRIPTION
	F00676040	FLEXIBLE SPOUT WITH MNDN LF K500 NEW
	F00676050	FLEXIBLE SPOUT WITH MNDN HF K500 NEW
	F00676060	FLEX SPOUT + NO DROP VALVE A/P K500 NEW
	F00676070	FLEX SPOUT + VALVE B\P K500 NEW
	F00676080	RIGID SPOUT + VALVE B\P K500 NEW
	F1251900A	GROUP SPOUT K500
	F1315300B	GROUP SPOUT + VALVE MNDV B/P

F00676080 F00676050 F00676070 F00676040

F00676050 F00676060

METERED NOZZLES

EASY K40	CODE	DESCRIPTION
	000934000	RIGID SPOUT W\MAN ANTI-DRIP VALVE HF
	000935000	FLEX SPOUT W\MAN ANTI-DRIP VALVE HF
	000938000	RIGID SPOUT W\MAN ANTI-DRIP VALVE LF
	F00660000	AUTO ANTI-DRIP VALVE HP
	F00665000	RIGID SPOUT W\AUTO ANTI-DRIP VALVE HP
	F00666000	FLEX SPOUT W\AUTO ANTI-DRIP VALVE
	F0067000A	RIGID SPOUT W\AUTO ANTI-DRIP VALVE LP
	F0067002A	RIGID SPOUT SHORT B/P
	F0067100A	FLEX SPOUT W\AUTO ANTI-DRIP VALVE LP
	F00690000	MAN ANTI-DRIP VALVE GAS 1/4IN LF
	F00691000	MAN ANTI-DRIP VALVE BSP 1/2IN HF§
	F00695000	MAN ANTI-DRIP VALVE GAS 3/8IN HF§
	F00939000	FLEX SPOUT W\MAN ANTI-DRIP VALVE LF
	F0845600A	SWIVEL 12.12
	F09659000	SWIVEL PROTECTION - BLACK
	F09757000	SWIVEL PROTECTION - YELLOW
	F09758000	SWIVEL PROTECTION - GREEN
	F09899000	SWIVEL PROTECTION - RED
	F09949000	EASY OIL FILTER 11.8X80
	F09955000	SWIVEL PROTECTION - BLUE
	F10696000	SWIVEL PROTECTION - WHITE

F00665000 F0067000A F0067002A 000934000 000938000

F00666000 F0067100A 000935000 F00939000

F00690000 F00691000 F00695000 F00660000

F09949000 F0845600A

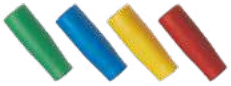

F09659000 - F09757000 - F09758000
F09899000 - F09955000 - F10696000

NOZZLES

EASY OIL

FEATURES

- BALANCED VALVE
- LIGHT PRESSURE LEVER
- ERGONOMIC GRAB
- BUILT-IN FILTER
- BUILT-IN LEVER LOCK
- COLOUR CODE SWIVEL

The PIUSI EASY OIL is a manual nozzle suitable for the delivery of a wide range of oils. Its ergonomic design and low weight make this nozzle unique in the market.

PERFORMANCE

UP TO 30 L/MIN	70 BAR
FLOW RATE	OPERATING PRESSURE

EASY OIL WITH FLEXIBLE SPOUT

with rigid spout

with rotating spout

without spout

PACKAGING

CODE	WEIGHT		PACKAGING			
	KG	LBS	MM	INCH	PCS/PALLET	PCS/BOX
F00966000A	0,45	1	203X320X88	8X12,6X3,5		1
F00966130	1,2	2,6	203X320X88	8X12,6X3,5		1
F00966140	1,2	2,6	203X320X88	8X12,6X3,5		1
F00966150	1,2	2,6	203X320X88	8X12,6X3,5		1

CHART

EASY OIL

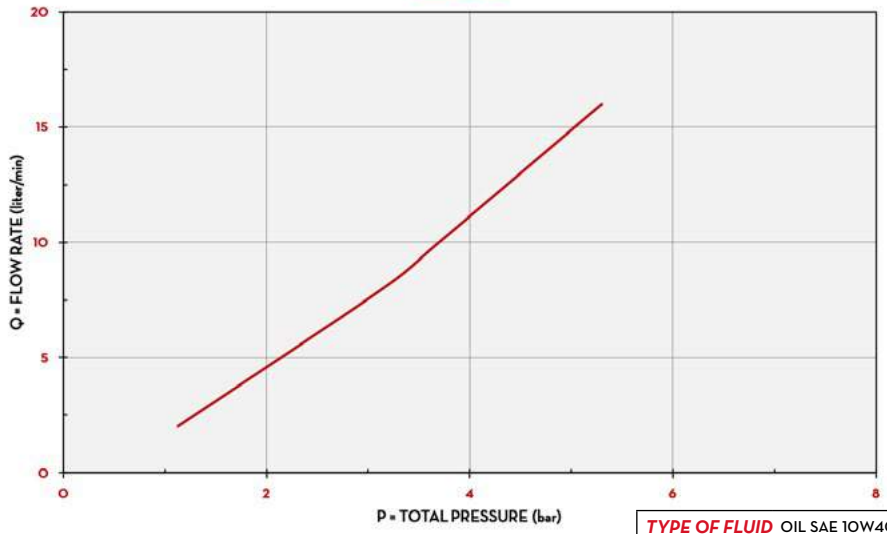

TYPE OF FLUID	OIL SAE 10W40
TEMPERATURE	23 °C

IN THE BOX

- EASY OIL NOZZLE
- INSTRUCTION MANUAL

DETAILS

1/2" OUTLET

SWIVEL 1/2 BSP

ANTI-SHOCK HANDGRIP

DIMENSIONS

RIGID SPOUT

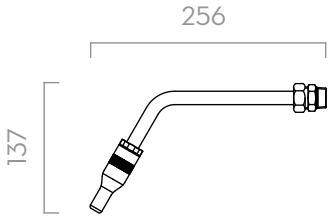

FLEXIBLE SPOUT

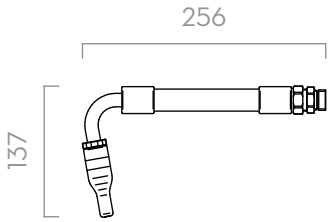

EASY OIL NOZZLE SIDE

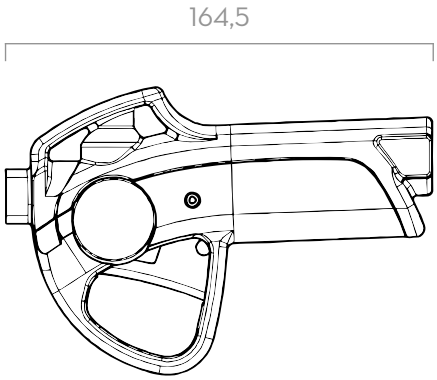

Dimensions expressed in millimeters

MATERIALS

- BODY: ALLUMINIUM
- VALVE: NBR, NICKEL PLATED STEEL, BRASS

TECHNICAL DATA

CODE	DESCRIPTION	FLUIDS TYPE	FLOW RATE		WORKING PRESSURE		SPOUT			OUTLET	INLET
			L/MIN	GPM	BAR	PSI	ROTATING	RIGID	FLEXIBLE		
F00966000A	EASY OIL ½" BSP W/O SPOUT	O	1 - 30	0,26 - 7,8	70	994	-	-	-	1/2" BSP	1/2" BSP
F00966130	EASY OIL ½" BSP W/RIGID SPOU - AUT VALV	O	1 - 30	0,26 - 7,8	70	994	-	YES	-	1/2" BSP	1/2" BSP
F00966140	EASY OIL ½" BSP W/FLEX SPOUT - AUT VALV	O	1 - 30	0,26 - 7,8	70	994	-	-	YES	1/2" BSP	1/2" BSP
F00966150	EASY OIL ½" BSP W/ROT SPOUT - AUT VALV	O	1 - 30	0,26 - 7,8	70	994	YES	-	-	1/2" BSP	1/2" BSP

NPT VERSION AVAILABLE

PISTOL-ONE

FEATURES

- HIGH PRESSURE RATIO
- LOW PRESSURE DROP
- STURDY AND DURABLE
- SURFACE POLISHING PROTECTION
- HIGH PERFORMANCE SWIVEL
- BUILT-IN LEVER LOCK

The PIUSI PISTOL-ONE is a manual nozzle suitable for the delivery of a wide range of oils at high flow rates. Its sturdy design makes this nozzle suitable for heavy duty operations.

PERFORMANCE

UP TO 90 L/MIN	100 BAR
FLOW RATE	OPERATING PRESSURE

PISTOL-ONE

with flexible spout

with rigid spout

PACKAGING

CODE	WEIGHT		PACKAGING			
	KG	LBS	MM	INCH	PCS/PALLET	PCS/BOX
F00640000	1,3	2,9	300X180X80	11,8X7,1X3,1		1
F00640010	1,9	4,2	300X180X80	11,8X7,1X3,1		1
F00640020	2,0	4,2	300X180X80	11,8X7,1X3,1		1

CHART

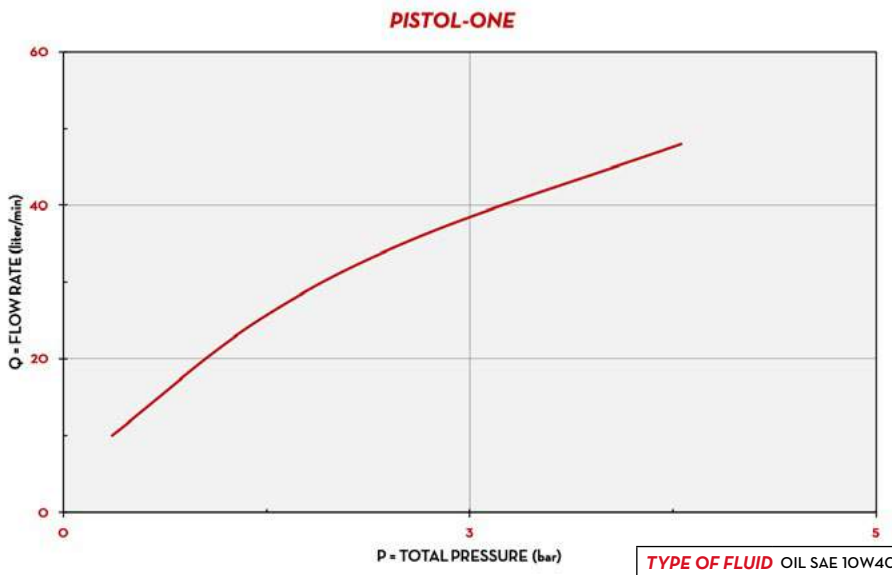

TYPE OF FLUID	OIL SAE 10W40
TEMPERATURE	23 °C

IN THE BOX

- PISTOL-ONE NOZZLE
- INSTRUCTION MANUAL

DETAILS

LEVER PROTECTION

ERGONOMIC AND COMPACT

HEAVY DUTY DESIGN

SWIVEL 3/4 BSP

DIMENSIONS

RIGID SPOUT

214

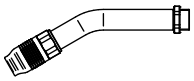

FLEXIBLE SPOUT

380

PISTOL-ONE NOZZLE SIDE

260

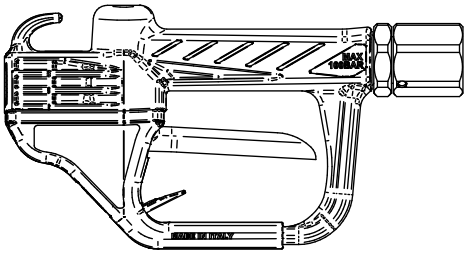

Dimensions expressed in millimeters

MATERIALS

- BODY: ALLUMINIUM
- VALVE: NBR, NICKEL PLATED STEEL, BRASS

TECHNICAL DATA

CODE	DESCRIPTION	FLUIDS TYPE	FLOW RATE		WORKING PRESSURE		SPOUT		INLET
			L/MIN	GPM	BAR	PSI	RIGID	FLEXIBLE	
F00640000	PISTOL-ONE ¾" BSP W/O SPOUT	O	6 - 60	1,5 - 15	70	994	-	-	3/4" BSP
F00640010	PISTOL-ONE ¾" BSP W/RIGID SPOUT	O	6 - 60	1,5 - 15	70	994	YES	-	3/4" BSP
F00640020	PISTOL-ONE ¾" BSP W/FLEX SPOUT	O	6 - 60	1,5 - 15	70	994	-	YES	3/4" BSP

NPT VERSION AVAILABLE

EASY WINDSCREEN PLASTIC MANUAL NOZZLE

FEATURES

- LOW WEIGHT
- ERGONOMIC GRAB
- READY TO USE

The PIUSI EASY WINDSCREEN and PLASTIC MANUAL NOZZLE are manual nozzles suitable for the delivery of windscreen and antifreeze.
They stand out for their minimal design while guaranteeing high performance.

PERFORMANCE

UP TO 150 L/MIN	LESS THAN 1KG WEIGHT
FLOW RATE	NOZZLE

PLASTIC MANUAL NOZZLE

EASY WINDSCREEN

PACKAGING

CODE	WEIGHT		PACKAGING			
	KG	LBS	MM	INCH	PCS/PALLET	PCS/BOX
NOZZLES						
F00976W10	0,45	1	203X320X88	8,12,6X31,5		1
F0063001A	0,2	0,4	-	-		1

CHART

EASY WINDSCREEN / PLASTIC MANUAL NOZZLE

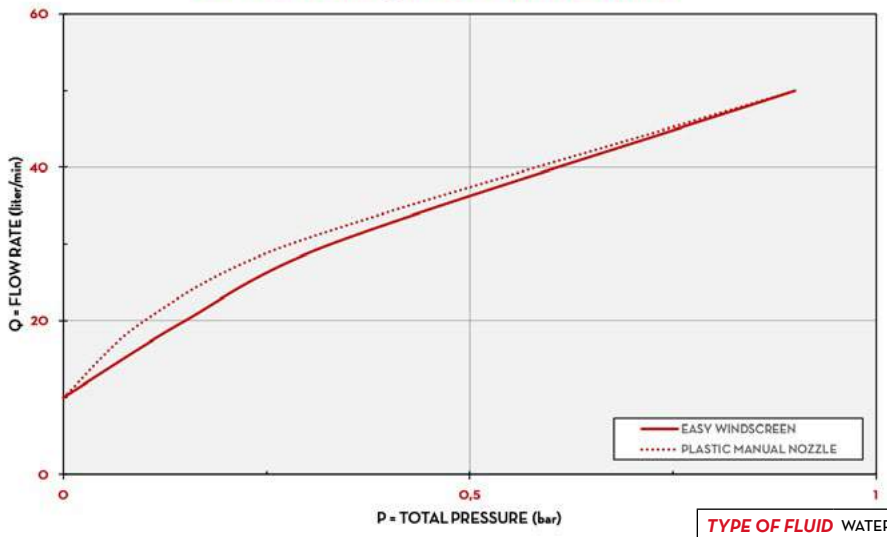

TYPE OF FLUID	WATER
TEMPERATURE	23 °C

IN THE BOX

- PLASTIC MANUAL NOZZLE
- EASY WINDSCREEN NOZZLE

DETAILS

LEVER LOCK

LEVER LOCK

DIMENSIONS

PLASTIC MANUAL NOZZLE

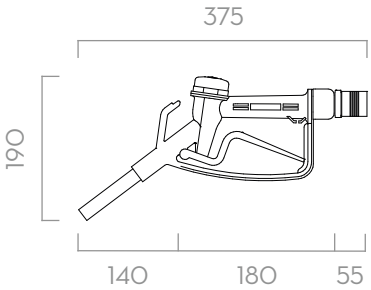

EASY WINDSCREEN

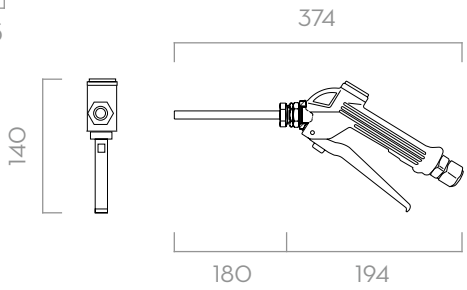

Dimensions expressed in millimeters

MATERIALS

- BODY: TECHNOPOLYMER
- VALVE: VITON

TECHNICAL DATA

CODE	DESCRIPTION	FLUIDS TYPE	FLOW RATE		WORKING PRESSURE		BATTERIES	INLET	OUTLET
			L/MIN	GPM	BAR	PSI	SIZE N NO.		
NOZZLES									
F00976W10	WINDSCREEN/ANTIFREEZE NOZZLE+RS+SW	W A	-	-	25	362	-	1/2" BSP	-
F0063001A	PLASTIC MANUAL NOZZLE	W A	1 - 80	0,3 - 21	3,4	49	-	3/4" HOSE TAIL	-

EASY WINDSCREEN / PLASTIC MANUAL NOZZLE

NOZZLES ACCESSORIES

MANUAL NOZZLE

EASY OIL	CODE	DESCRIPTION
	F00670030	RIGID STRAIGHT SPOUT B/P !§
	F00676000	FLEXIBLE SPOUT + NO DRIP VALVE HP
	000934000	RIGID SPOUT W\MAN ANTI-DRIP VALVE HF
	000935000	FLEX SPOUT W\MAN ANTI-DRIP VALVE HF
	000938000	RIGID SPOUT W\MAN ANTI-DRIP VALVE LF
	F00660000	AUTO ANTI-DRIP VALVE HP
	F00665000	RIGID SPOUT W\AUTO ANTI-DRIP VALVE HP
	F00666000	FLEX SPOUT W\AUTO ANTI-DRIP VALVE
	F0067000A	RIGID SPOUT W\AUTO ANTI-DRIP VALVE LP
	F0067002A	RIGID SPOUT SHORT B/P
	F0067100A	FLEX SPOUT W\AUTO ANTI-DRIP VALVE LP
	F00690000	MAN ANTI-DRIP VALVE GAS 1/4IN LF
	F00691000	MAN ANTI-DRIP VALVE BSP 1/2IN HF§
	F00695000	MAN ANTI-DRIP VALVE GAS 3/8IN HF§
	F00939000	FLEX SPOUT W\MAN ANTI-DRIP VALVE LF
	F0845600A	SWIVEL 12.12
	F09659000	SWIVEL PROTECTION - BLACK
	F09757000	SWIVEL PROTECTION - YELLOW
	F09758000	SWIVEL PROTECTION - GREEN
	F09899000	SWIVEL PROTECTION - RED
	F09949000	EASY OIL FILTER 11.8X80
	F09955000	SWIVEL PROTECTION - BLUE
	F10696000	SWIVEL PROTECTION - WHITE

F00665000 F0067000A F0067002A 000934000 000938000

F00666000 F0067100A 000935000 F00939000

F00690000 F00691000 F00695000 F00660000

F09949000 F0845600A

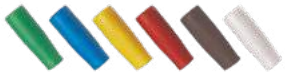

F09659000 - F09757000 - F09758000
F09899000 - F09955000 - F10696000

PISTOL-ONE	CODE	DESCRIPTION
	F1600501A	RIGID SPOUT PISTOL-ONE
	F1600401A	FLEXIBLE SPOUT PISTOL-ONE

F1600501A F1600401A

WASTE OIL EQUIPMENTS

EASY DRAINER 80

FEATURES

- COMPRESSED AIR NOT REQUIRED
- READY / EASY TO USE
- EASY TO MOVE
- COMPACTNESS
- LEVEL INDICATOR
- GRATE DRIPPING SYSTEM
- COLLECTION TANK
- TELESCOPIC

The PIUSI EASY DRAINER 80 is the simplest equipment to answer any need of draining oil out of a vehicle. Its mobile cart allows the system to be used on any surface.

PERFORMANCE

UP TO 80L	UP TO 12L
TANK CAPACITY	BOWL CAPACITY

2M LENGTH
DISCHARGING PIPE

EASY DRAINER 80

PACKAGING

CODE	WEIGHT		PACKAGING			
	KG	LBS	MM	INCH	PCS/PALLET	PCS/BOX
F00215A20	27,5	60,6	480X520X1210	18,1X18,1X39,8		1

DIMENSIONS

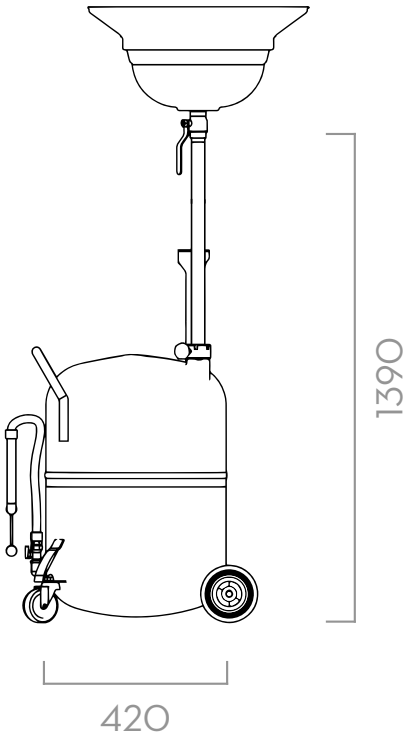

Dimensions expressed in millimeters

IN THE BOX

- EASY DRAINER 80
- INSTRUCTION MANUAL

DETAILS

INFLATING VALVE + GAUGE

MATERIALS

- BODY: CAST IRON

TECHNICAL DATA

CODE	DESCRIPTION	FLUIDS TYPE	TANK CAPACITY		TANK LEVEL GAUGE	BOWL Ø 520 MM CAPACITY	DISCHARGE SAFETY VALVE	FLEXIBLE PROBES KIT	DISCHARGING PIPE	SUCTION PIPE	TRANSPARENT VIEWER
			LIT	GAL		LIT	0,5 BAR		M	M	LIT
F00215A20	EASY-DRAINER 80	O	80	21,1	YES	12	YES	NO	2	NO	NO

EASY DRAINER 80

VACUDRAINER 80 / VACU 80

FEATURES

- GRADUATED VIEWER
- TRANSPARENT SUCTION CHAMBER
- VACUUM /LEVEL INDICATOR
- COMPRESSED AIR NOT REQUIRED
- READY & EASY TO USE
- COMPACTNESS & MOBILE
- GRATE DRIPPING SYSTEM
- COLLECTION TANK
- TELESCOPIC

The PIUSI VACUDRAINER 80 and VACU 80 are the evolution of the well known EASY DRAINER 80. The built-in measuring gauge allows to continuously control the amount of waste oil coming out of the vehicle.

PERFORMANCE

UP TO 80L	UP TO 12L
TANK CAPACITY	BOWL CAPACITY

2M LENGTH
DISCHARGING PIPE

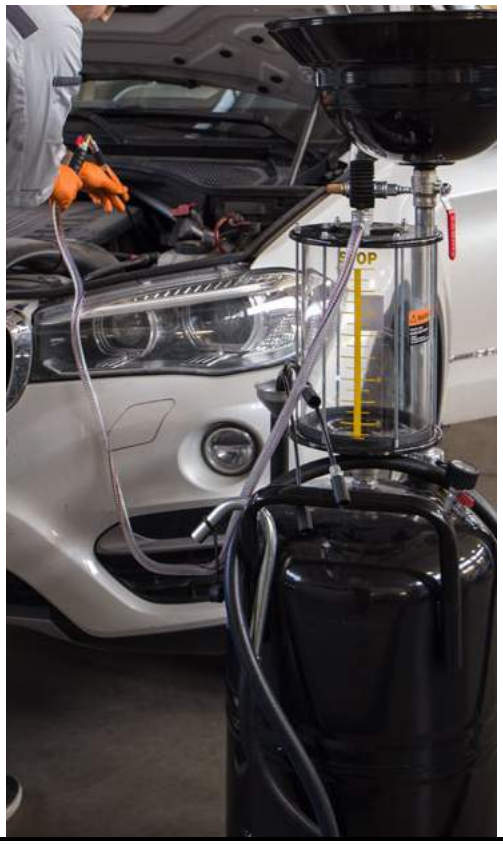

PACKAGING

CODE	WEIGHT		PACKAGING			
	KG	LBS	MM	INCH	PCS/PALLET	PCS/BOX
F00215A40	28,2	62,2	480X480X1030	18,8X18,9X40,5		1
F00215A30	32,5	71,6	480X520X1210	18,8X20,8X47,6		1

DIMENSIONS

VACU-DRAINER 80

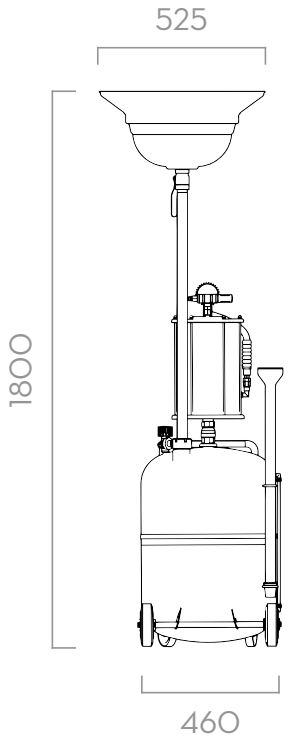

VACU 80

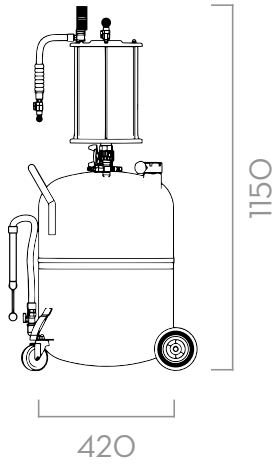

Dimensions expressed in millimeters

IN THE BOX

- VACUDRAINER 80 / VACU 80
- INSTRUCTION MANUAL

DETAILS

INFLATING VALVE + GAUGE

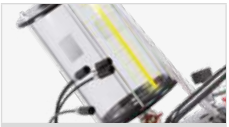
RECOVERY VIEWER

VACUUM GAUGE

SUCTION PROBES

MATERIALS

- BODY: CAST IRON

TECHNICAL DATA

CODE	DESCRIPTION	FLUIDS TYPE	TANK CAPACITY		TANK LEVEL GAUGE	BOWL Ø 520 MM CAPACITY	DISCHARGE SAFETY VALVE	FLEXIBLE PROBES KIT	DISCHARGING PIPE	SUCTION PIPE	TRANSPARENT VIEWER
			LIT	GAL		LIT	0,5 BAR		M	M	LIT
F00215A40	VACU 80	O	80	21,1	YES	NO	YES	YES	2	2	9
F00215A30	VACU-DRAINER 80	O	80	21,1	YES	12	YES	YES	2	2	9

VACUDRAINER 80 / VACU 80

VACUBOX

FEATURES

- AUTOMATIC OPERATION
- COMPRESSED AIR NOT REQUIRED
- NO EMPTYING NEEDED
- IDEAL FOR CENTRALIZED SYSTEMS
- ACOUSTIC SIGNAL
- VACUUM INDICATOR
- OPERATOR NOT REQUIRED
- ASPIRATION FROM DEEPSTICK BONNET
- HIGH SUCTION CAPACITY

The PIUSI VACUBOX is the perfect solution to automatically drain oil from a tank without the need of compressed air. Inside this all inclusive item there is an electric gear pump, a pressure switch and an electronic board that automatically switches off the pump once the tank is empty.

PERFORMANCE

UP TO 10L TANK CAPACITY	AC VOLTAGE POWER
BELOW 65DB NOISE LEVEL*	

VACUBOX

PACKAGING

CODE	WEIGHT		PACKAGING			
	KG	LBS	MM	INCH	PCS/PALLET	PCS/BOX
F00500B00	10	22	295X295X325	11,6X11,6X12,8		1

FUNCTIONING

FULLY AUTOMATIC!

Suction directly from car and directly driven into waste oil storage tank.

IN THE BOX

- VACUBOX
- INSTRUCTION MANUAL

DETAILS

COMPACT DESIGN

AUTOMATIC STOPS

DIMENSIONS

VACUBOX FRONT

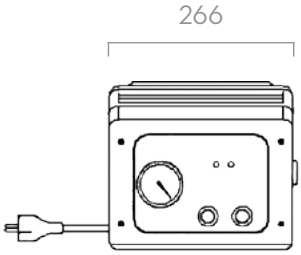

VACUBOX SIDE "A"

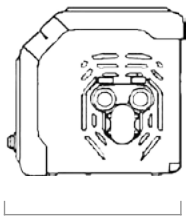

VACUBOX SIDE "B"

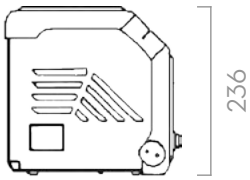

Dimensions expressed in millimeters

MATERIALS

- PUMP BODY: CAST IRON
- PUMP GEARS: BRONZE
- SHAFT: STEEL

TECHNICAL DATA

CODE	DESCRIPTION	FLUIDS TYPE	FLOW RATE		VOLTAGE			INLET
			L/MIN	GPM	AC V./HZ DC VOLT	POWER WATT	AMP. MAX.	BSP
FOO500B00	VACUBOX	O	1 - 10	0,25 - 2,5	230/50	350	2	1/2"

AVAILABLE AT 110-120 V / 60 HZ

VACUBOX

CAMBIAOLIO

FEATURES

- IDEAL FOR SMALL WORKSHOPS
- COMPRESSED AIR NOT REQUIRED
- 6 SUCTION PROBES INCLUDED
- VERSATILE
- VACUUM INDICATOR
- 5 METERS OF CABLE
- GRADUATED COLLECTION TANK
- EASY TO EMPTY

The CAMBIAOLIO is the traditional offer that PIUSI provides for a perfect oil change without the need of compressed air. This small device comes on a trolley that makes it transportable everywhere.

PERFORMANCE

UP TO 10L TANK CAPACITY	AC/DC VOLTAGE POWER
BELOW 70DB NOISE LEVEL**	

CAMBIAOLIO

PACKAGING

CODE	WEIGHT		PACKAGING			
	KG	LBS	MM	INCH	PCS/PALLET	PCS/BOX
F0050000B	19,5	43	600X290X300	23,6X11,4X11,8		1
00050006A	19,5	43	600X290X300	23,6X11,4X11,8		1

DIMENSIONS

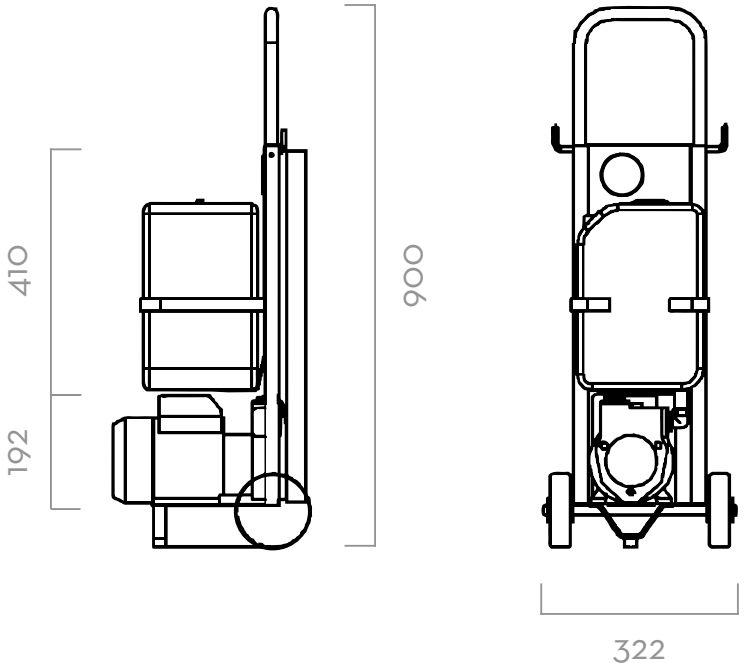

Dimensions expressed in millimeters

IN THE BOX

- CAMBIAOLIO
- INSTRUCTION MANUAL

DETAILS

ON/OFF SWITCH

PRESSURE GAUGE

TANK 10 LITER

MATERIALS

- PUMP BODY: CAST IRON
- PUMP GEARS: BRONZE
- SHAFT: STEEL

TECHNICAL DATA

CODE	DESCRIPTION	FLUIDS TYPE	FLOW RATE		VOLTAGE			TANK	
			L/MIN	GPM	AC V./HZ DC VOLT	POWER WATT	AMP. MAX.	LITER	GAL
F0050000B	CAMBIAOLIO M	O	2 - 10	0,5 - 2,5	230/50-60	350	2	10	3
00050006A	CAMBIAOLIO 120V / 60 HZ	O	2 - 10	0,5 - 2,5	120/60	1200	12,7	10	3

ACCESSORIES

OIL DRAINERS

EASY DRAINER 80	CODE	DESCRIPTION
	F2163500A	FLEXIBLE HOSE D.5 L= 800 MM
	F2215600A	PROBE KIT 80 CM

F2163500A F2215600A

VACUDRAINER 80 / VACU 80	CODE	DESCRIPTION
	F2163500A	FLEXIBLE HOSE D.5 L= 800 MM
	F2215600A	PROBE KIT 80 CM

F2163500A F2215600A

ELECTRIC OIL DRAINERS

VACUBOX	CODE	DESCRIPTION
	R08309000	KIT PROBES CAMBIAOLIO
	F11774010	KIT GAUGES VACUBOX 8X6 / 6X4 X 1000

R08309000 F11774010

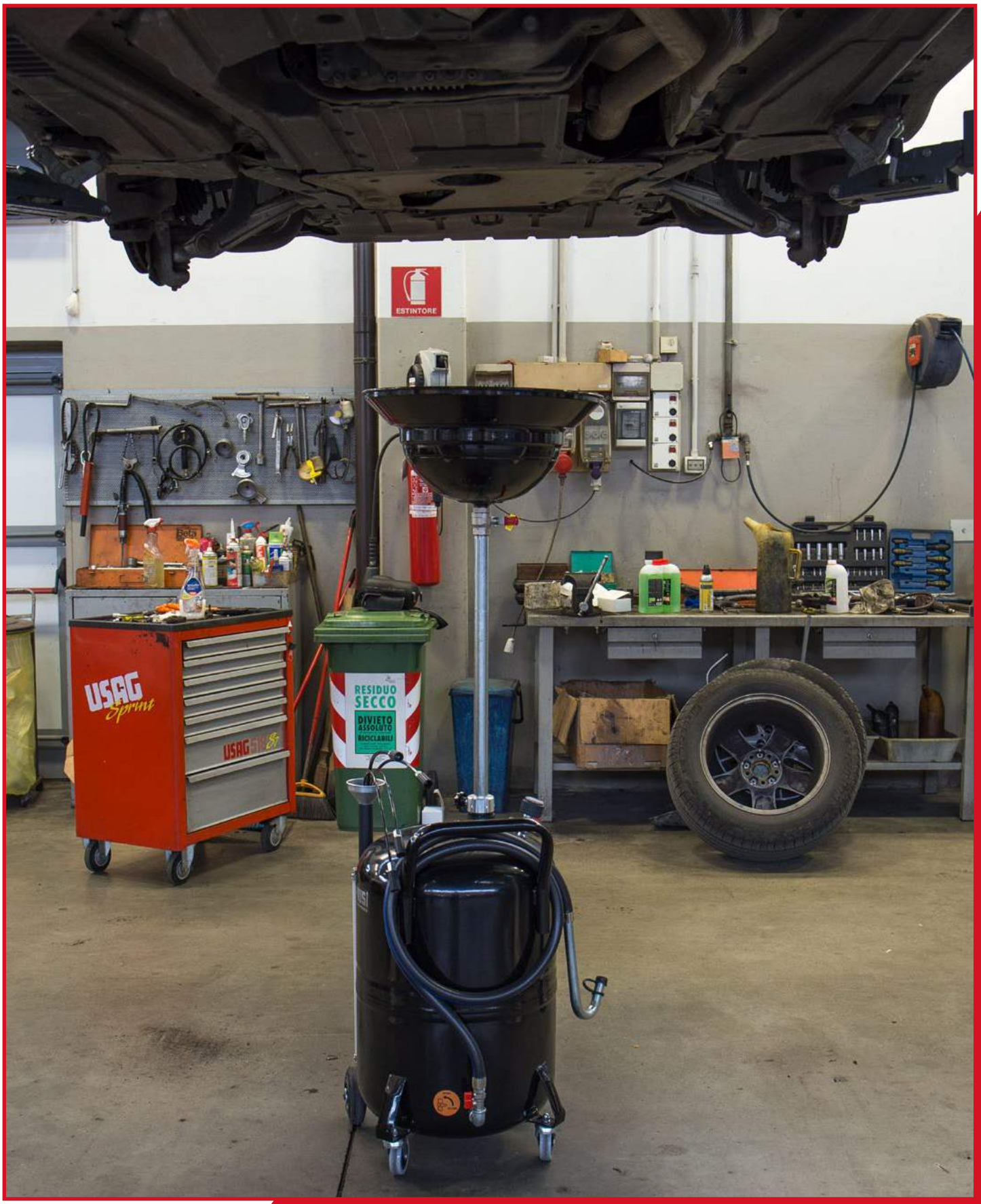
ESTINTORE
USAG
Sprint
RESIDUO
SECCO
DIVIETO
ASSOLUTO
RICICLABILE

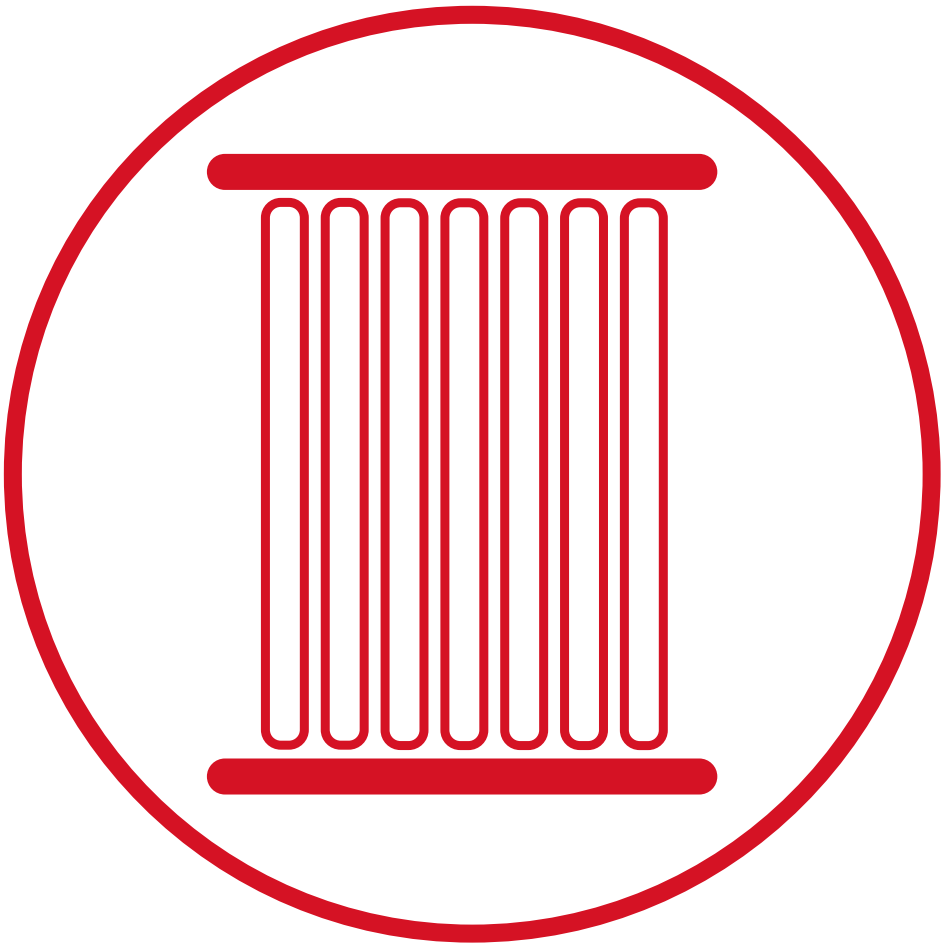

FILTRATION

DEPUROIL

FEATURES

- IDEAL FOR DIALYSIS OF OIL
- COMPACTNESS
- SILENT
- CLOGGING INDICATOR
- 5 METERS OF CABLE
- SPIRAL TUBES

The PIUSI DEPUROIL is an immediate mobile filtering unit, the easiest solution to a single step filtration suitable for any kind of tank. It includes the PIUSI VISCOMAT VANE pump, suitable for low/medium viscosity lubricants.

PERFORMANCE

UP TO 50L	AC VOLTAGE
TANK CAPACITY	POWER

DEPUROIL

PACKAGING

CODE	WEIGHT		PACKAGING			
	KG	LBS	MM	INCH	PCS/PALLET	PCS/BOX
00050300A	28	61,7	600X290X300	23,6X11,4X11,8		1
F00503100	28	61,7	600X290X300	23,6X11,4X11,8		1

CHART

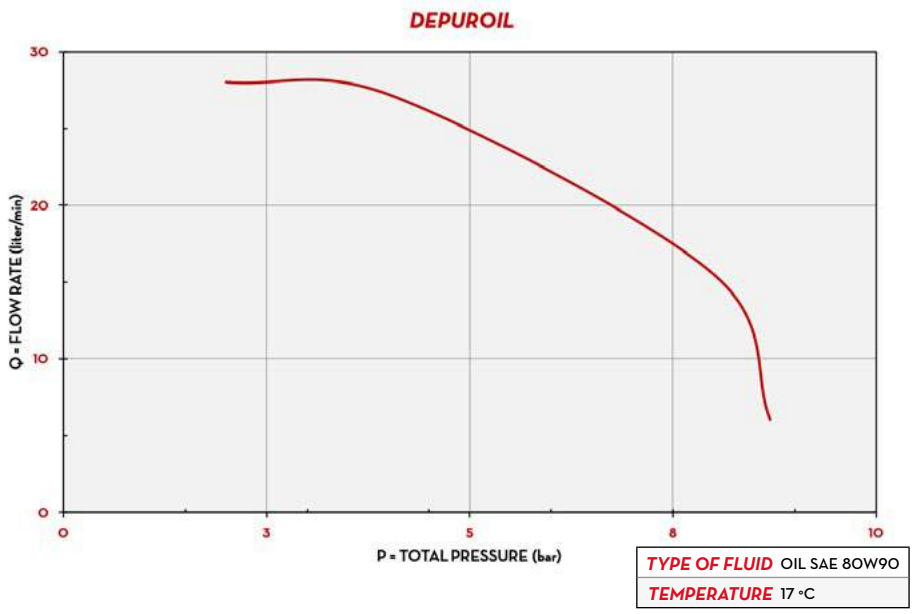

TYPE OF FLUID	OIL SAE 80W90
TEMPERATURE	17 °C

IN THE BOX

- DEPUROIL
- FILTER CARTRIDGE
- SUCTION HOSE
- DELIVERY HOSE
- INSTRUCTION MANUAL

DETAILS

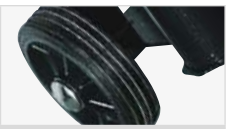

LARGE DIAMETER WHEELS

STURDY STRUCTURE

DIMENSIONS

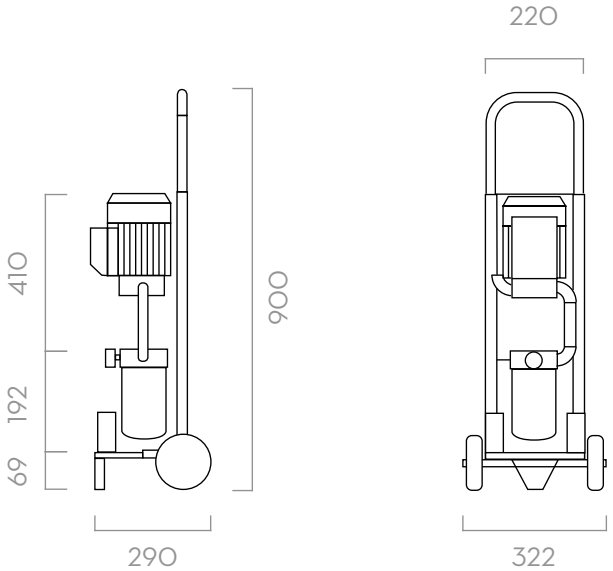

Dimensions expressed in millimeters

MATERIALS

- BODY: CAST IRON
- ROTOR: SINTHERED STEEL
- VAINS: TECHNOPOLYMER
- SHAFT: STEEL
- FILTER: ABSORBENT FILTERING PAPER

TECHNICAL DATA

CODE	DESCRIPTION	FLUIDS TYPE	FLOW RATE		VOLTAGE			PUMP	HOSE LENGHT		FILTERING CAPACITY
			L/MIN	GPM	AC V./HZ DC VOLT	POWER WATT	AMP. MAX.	TYPE	DELIVERY /FT	SUCTION M/FT	MU
00050300A	DEPUROIL M 230V/50HZ	O	20-25	5,28-6,6	230/50	1350	6,2	VISCOMAT 70	2 / 6,5	2 / 6,5	10
F00503100	DEPUROIL 60	O	50	13	230/50	1350	6,2	VISCOMAT 90	2	2	10

FILTROLL

FEATURES

- DOUBLE-STAGE FILTRATION
- CLOGGING INDICATOR
- TRANSPORTABLE
- MANAGEABLE
- SPIRAL TUBES

The PIUSI FILTROLL is an innovative solution that allows the user to perform a circular filtering of any kind of tank. The built-in trolley allows the operator to easy handle this device in any condition.

PERFORMANCE

UP TO 25L/MIN FLOW RATE	AC VOLTAGE POWER
DC VERSION 30MIN ONLY FOR DIESEL DUTY CICLE	

FILTROLL OIL/DIESEL

PACKAGING

CODE	WEIGHT		PACKAGING			
	KG	LBS	MM	INCH	PCS/PALLET	PCS/BOX
F00506010	42	92,6	790X590X590	31,1X23,2X23,2		1

CHART

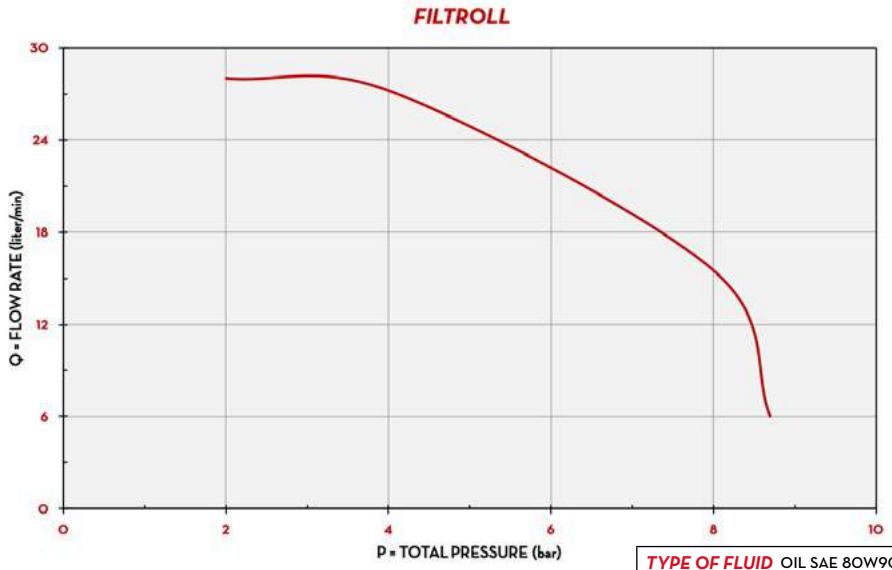

TYPE OF FLUID	OIL SAE 80W90
TEMPERATURE	17 °C

IN THE BOX

- FILTROLL UNIT
- SUCTION HOSE
- DELIVERY HOSE
- INSTRUCTION MANUAL

DETAILS

TWO STEP FILTRATION

STURDY STRUCTURE

LARGE DIAMETER WHEELS

DIMENSIONS

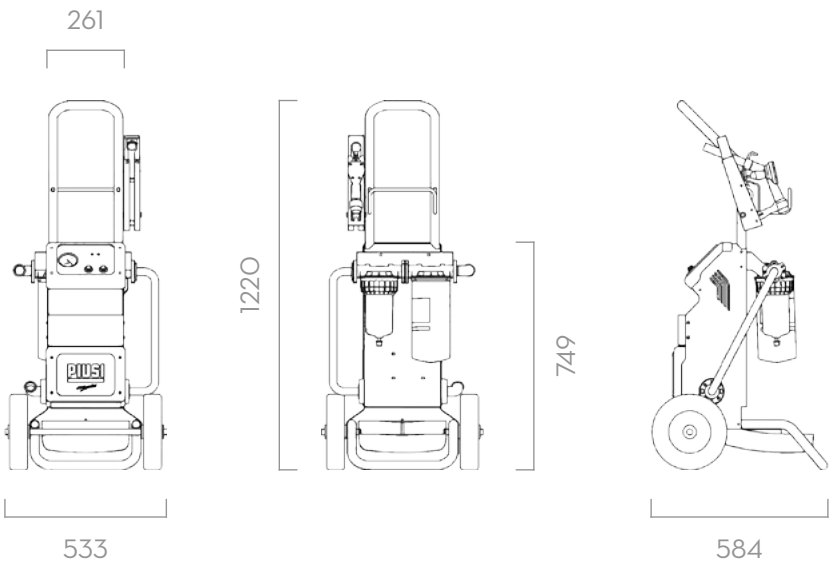

Dimensions expressed in millimeters

MATERIALS

- BODY: CAST IRON
- ROTOR: SINTHERED STEEL
- VAINS: TECHNOPOLYMER
- SHAFT: STEEL
- FILTER: ABSORBENT FILTERING PAPER

TECHNICAL DATA

CODE	DESCRIPTION	FLUIDS TYPE	FLOW RATE		VOLTAGE			PUMP	HOSE LENGHT	
			L/MIN	GPM	AC V./HZ DC VOLT	POWER WATT	AMP. MAX.	TYPE	DELIVERY M/FT	SUCTION M/FT
F00506010	FILTROLL OIL/DIESEL	D O	25	7	230/50	750	4,6	VISCOMAT 70	3 / 9,8	3 / 9,8

OIL FILTERS

FEATURES

- READY TO USE
- REPLACEABLE CARTRIDGE
- HIGH EFFICIENCY
- SMALL SIZE

The line filters with spin on cartridges are suitable to be used on both the suction and delivery side of lubricating systems. They are available in 3/4" and 1" inch fittings.

100 L/MIN FILTER

60 L/MIN FILTER

PERFORMANCE

UP TO	MAX
100 L/MIN	3,5 BAR
FLOW RATE	OPERATING PRESSURE
FILTERING CAPACITY	FILTERING CAPACITY
200β/10μ	2β/5-10μ
BIOFUEL	FUEL

PACKAGING

CODE	WEIGHT	PACKAGING		
	KG	DIMENSIONS MM	CARTRIDGE PSC / BOX	FILTER HEAD PCS/BOX
FILTER FOR FUEL AND OIL				
F0777200A	1	200X120X140	1	1
F09149020	2,6	390X285X140	1	1
FILTER FOR FUEL AND OIL				
F09359010	-	-	1	-
F16483010	9,2	500X300X200	15	-
FILTER FOR FUEL AND OIL				
F14528000	-	-	-	1

DIMENSIONS

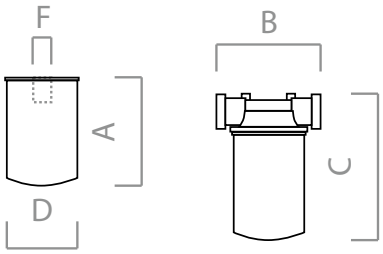

OIL FILTERS

OIL FILTERS

	A (MM)	B (MM)	C (MM)	D (MM)	F
F0777200A	-	100	160	98	-
F0914900A	-	171	236	132	-
F09149020	-	171	236	132	-
F00611000	145	-	-	98	3/4" BSP
F09359000	180	-	-	132	1"1/4 BSP
F09359010	180	-	-	132	1"1/4 BSP
F16483010	139	-	-	93	-
F14528000	-	100	-	-	3/4" BSP
F15743000	-	171	-	-	1"1/2-16 UNF 1"1/4 BSP

IN THE BOX

- FILTER CARTRIDGE
- INSTRUCTION MANUAL

DETAILS

FILTER HEAD

REPLACEABLE CARTRIDGE

MATERIALS

- FILTER HEAD: CASTING ALUMINIUM
- CARTRIDGE: SAP/PET
- SEAL: VULCANIZED RUBBER

TECHNICAL DATA

CODE	DESCRIPTION	FLUIDS TYPE	FLOW RATE		INLET / OUTLET	WATER ABSORBING	EFFICIENCY	MICRO	WORKING PRESSURE
			L/MIN	GPM	BSP		ß	µ m	BAR
OIL FILTERS									
F0777200A	60 L/MIN FILTER WITH HEAD	B D G O	60	15,9	1"	NO	2	10	12
F09149020	100 L/MIN FILTER WITH HEAD	B D G O	100	26,4	1"	NO	2	5	12
OIL FILTER CARTRIDGE									
F09359010	CARTRIDGE 100 L/MIN	B D G O	100	26,4	-	NO	2	5	12
F16483010	KIT CARTRIDGE 60 L/MIN 15 (PCS)	B D G O	60	15,9	-	NO	2	10	12
FILTER HEAD									
F14528000	FILTER HEAD 3/4 BSP 60 L/MIN	-	-	-	1"	NO	-	-	-

OIL FILTERS

CLEAR CAPTOR

FEATURES

- READY TO USE
- REPLACEABLE CARTRIDGE
- HIGH EFFICIENCY
- SMALL SIZE

The CLEAR CAPTOR is a cartridge filter that includes a transparent container and a removable inner cartridge. It is available with paper filter that also allows water absorbtion.

PERFORMANCE

UP TO	MAX
150 L/MIN	5 BAR
FLOW RATE	OPERATING PRESSURE

5/125µ
FILTERING CAPACITY

CLEAR CAPTOR WATER FILTER
WATER ABSORPTION

PACKAGING

CODE	WEIGHT	PACKAGING		
	KG	DIMENSIONS MM	CARTRIDGE PSC / BOX	FILTER HEAD PCS/BOX
CLEAR CAPTOR				
F00611B10	2,0	390X285X140	2	1
F00611B00	2,3	390X285X140	2	1
F00611B60	2,3	390X285X140	1	1
CLEAR CAPTOR CARTRIDGE				
F00611030	1,1	190X190X240	6	-
F00611040	1,3	190X190X240	6	-
F00611060	0,2	130X80X80	1	-
CLEAR CAPTOR FILTER HEAD				
F15744000	0,9	200X120X140	-	1

DIMENSIONS

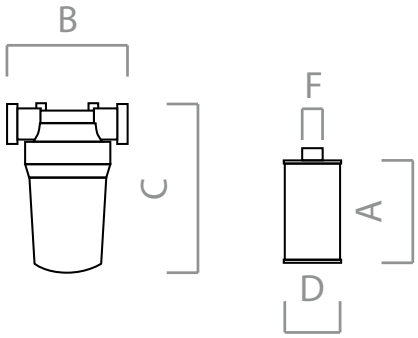

CLEAR CAPTOR

CODE	A (MM)	B (MM)	C (MM)	D (MM)	F
F00611B00	-	171	270	-	-
F00611B10	-	171	270	-	-
F00611B60	-	171	270	-	-
F00611030	110	-	-	75	1" BSP M
F00611040	155	-	-	75	1" BSP M
F00611060	110	-	-	75	1" BSP M
F15744000	-	171	-	-	1" BSP F

IN THE BOX

- FILTER CARTRIDGE
- INSTRUCTION MANUAL

DETAILS

STRAINER CARTRIDGE

IMPURITIES PAPER CARTRIDGE

WATER PAPER CARTRIDGE

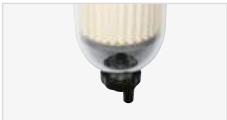

DRAIN VALVE

MATERIALS

- FILTER HEAD: CASTING ALUMINIUM
- CARTRIDGE: SAP/PET
- SEAL: NBR

CLEAR CAPTOR FILTER STRAINER

CLEAR CAPTOR FILTER 5 MICRON

TECHNICAL DATA

CODE	DESCRIPTION	FLUIDS TYPE	FLOW RATE		INLET/ OUTLET	WATER ABSORBING	EFFICIENCY	MICRO	WORKING PRESSURE	CARTRIDGE
			L/MIN	GPM	BSP		SS	µ	BAR	N°
CLEAR CAPTOR										
F00611B00	CLEAR CAPTOR FILTER - 5 MICRO /2 CARTD	B D G	100	26,4	1"	NO	2	5	5	2
F00611B10	CLEAR CAPTOR FILTER - WATER ABS /2 CARTD	B D G	70	18,5	1"	YES	200	30	5	2
F00611B60	CLEAR CAPTOR FILTER - STRAINER /1 CARTD	B D G	100	26,4	1"	NO	2	125	5	1
CLEAR CAPTOR CARTRIDGE										
F00611030	CLEAR CAPTOR CARTRIDGE 5 MICRON (6 PCS)	B D G	100	26,4	-	NO	2	5	-	6
F00611040	CLEAR CAPTOR CARTRIDGE WATER ABS (6 PCS)	B D G	70	18,5	-	YES	200	30	-	6
F00611060	STRAINER CARTDRIGE CLEAR CAPTOR	B D G	100	26,4	-	NO	2	125	-	1
CLEAR CAPTOR FILTER HEAD										
F15744000	FILTER HEAD CLEAR CAPTOR		-	-	1"	NO	-	-	-	-

FLUID MONITORING

OVERVIEW

The consumption of oil and lubricants is one of the most expensive cost of a garage. Not only economically, but also in terms of time, waste and necessary personnel. To overcome all these dynamics, in a technological and precise way, fluid monitoring systems were born. Dedicated software that, installed in dialogue with a centralized lubrication system, allows you to monitor, manage and dispense the flow of oil or lubricants. With the MCO oil monitoring system, PIUSI enter in the lubrication management market with a dedicated rage of equipment. Each device, dispenser or flow meter PIUSI for MCO communicates its status to the entire network. This allows you to create a smoother and more efficient workflow, led by software and devices of a new generation. It's a real revolution capable of bringing a massive injection of innovation into in your garage. The MCO system network's fluid dispensing flows to allow optimal monitoring, while simultaneously offering a comprehensive set of tools and opportunities for the management and organization of each work process.

MCO by PIUSI allows to:

- make quick and precise dispensing operations in order to reduce costs, time and to avoid wastes;
- handle all fluids in a centralized way;
- improve the profitability of the business thanks to a centralized system that manage all transactions avoiding errors due to human factor.

Within the MCO system, PIUSI has developed MCO GO and MCO 2.0: two fluid monitoring systems suitable for all workshops and needs; form the simpler to the most complex.

Discover the features of the two products and choose the one that suits your needs!

	MCO GO®	MCO 2.0®
Report	Only with Cloud Software MCO GO*	✓
Number of Hose Reels	Up to 6 for each Control Unit	No limit
Tank level indication	Calculated only with **Cloud Software MCO GO**	✓
Ticket Printer	✓	✓
Integration with DMS	Export CSV to flash drive or from **Cloud Software MCO GO**	✓
Network	Not required	LAN / Wi-Fi network required
Management of maintenance&repair tasks	-	✓
Operators Access Control List (ACL)	-	✓
Vehicules and customers management	-	✓
Agenda scheduling	-	✓

*CSV data export always possible

CONTROL UNIT 3
AREA 3

MCO 2.0

Do you want to improve the efficiency of your garage? Do you want to maintain control over all the consumptions of lubricants, diesel or AdBlue®? The solution for you is MCO 2.0!

MCO 2.0 is a centralized fluid monitoring system that allows you to control, monitor, dispense and measure all the lubricants and fuels that are dispended in the garage during a normal working day. All this from a single equipment.

Expressly engineered for all workshops that need a centralized management of all fluids, the system is composed of several elements connected via Wi-Fi or LAN.

With the fluid monitoring system MCO 2.0 you can always:

- know WHO has dispensed the fluid: each operator has a unique code;
- know HOW MUCH fluid has been dispensed with precision up to the last drop;
- keep track of ALL TRANSACTIONS to ensure no portion of the completed work was forgotten or missing in the final billing to customers;
- avoid HUMAN ERRORS in fluid dispensing.

With the fluid monitoring system MCO 2.0 all the information is clear, precise and accurate.

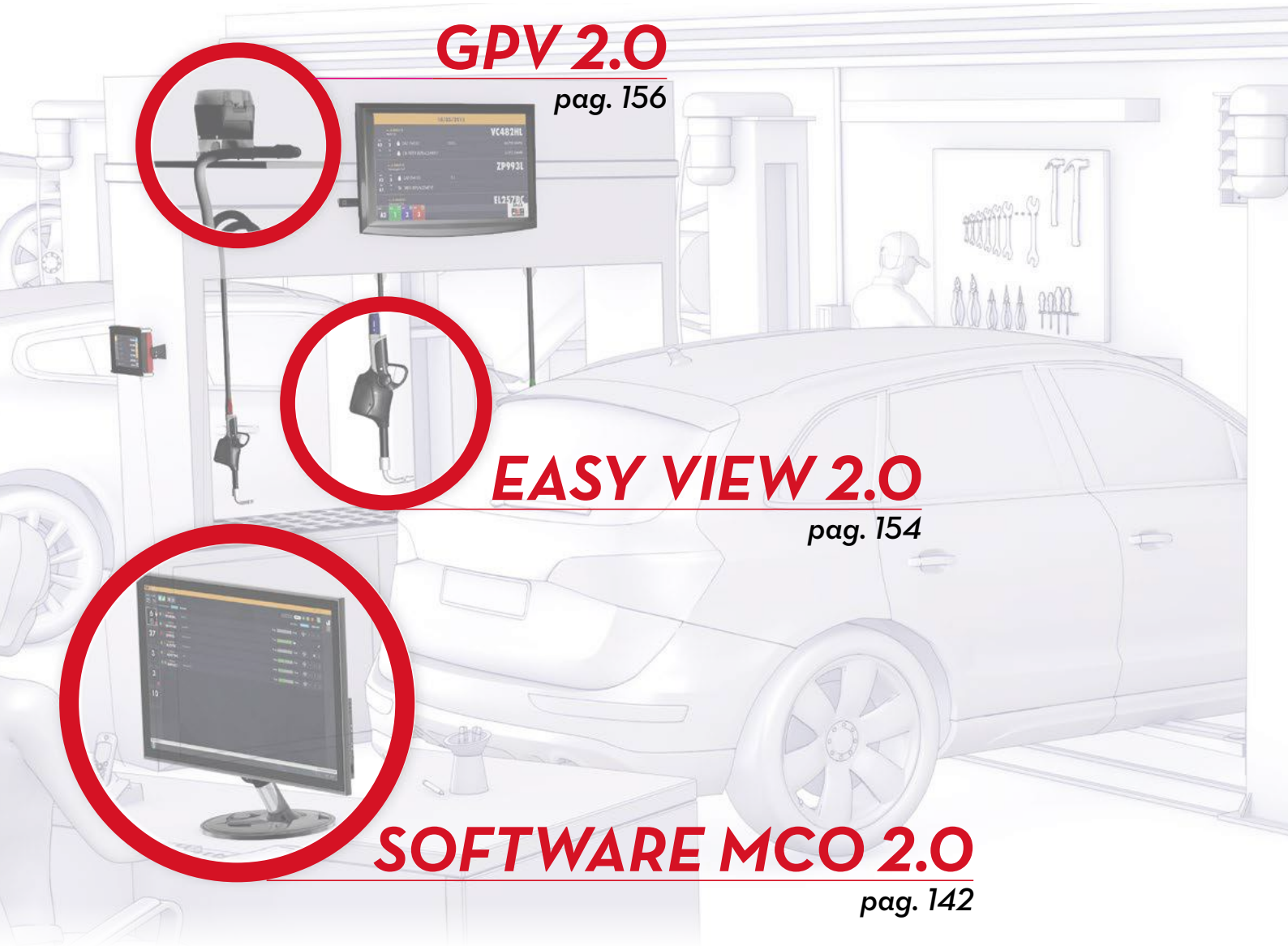

GPV 2.0

pag. 156

EASY VIEW 2.0

pag. 154

SOFTWARE MCO 2.0

pag. 142

A AIR | A ANTIFREEZE | Ad AdBlue® | B BIODIESEL | D DIESEL | F FOOD | G GASOLINE | G GREASE | K KEROSENE | O OIL | W WATER | W WINDSCREEN

DONGLE 2.0

pag. 148

OCIO 2.0

pag. 150

CONTROL UNIT 2.0

pag. 146

MCO GO

MCO GO is the plug&play system by PIUSI that allows you to manage and monitor the flow of oil and other fluids in your garage. Say goodbye to wastes, jerry cans, mobile tanks and trolleys.Now with MCO GO even the smallest workshops have a centralized system available, allowing them to:

- make quick and precise dispensing operations in order to reduce costs, time and to avoid wastes;
- handle all fluids in a centralized way;
- export all the dispensing operations;
- improve the profitability of their business.

MCO GO is quick and simple to install: simply connect the components to the Control Unit and you're ready to go! No need for complex networks, software or Wi-Fi: everything is triggered by one click. A real Plug&Play. Simple and versatile, it is suitable for any kind of retrofit.

CONTROL UNIT MCO GO

pag. 152

TICKET PRINTER

pag. 158

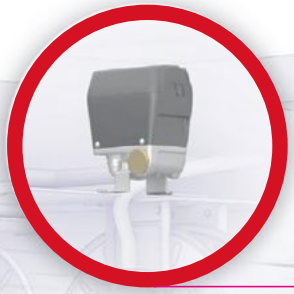

GPV 2.0

pag. 156

EASY VIEW 2.0

pag. 154

CLOUD SOFTWARE MCO GO

pag. 144

SOFTWARE MCO 2.0

FEATURES

- *AVAILABLE IN DIFFERENT VERSIONS*
- *CUSTOMIZED SOLUTIONS*
- *SUPPORTS MULTIPLE BAYS*

PIUSI MCO 2.0 arises from the need to organize your work within your workshop. Starting right from your desk. From your office work station MCO 2.0 SOFTWARE allows you to enter, display and manage work orders for the entire garage, checking states of completion and deadlines. Thanks to the weekly agenda function, all it takes is a glance.

PERFORMANCE

WI-FI / LAN	USB/WEB SOFTWARE VERSION
CONNECTION SYSTEM	INSTALLATION

ALL UNDER CONTROL

Create a new work order.

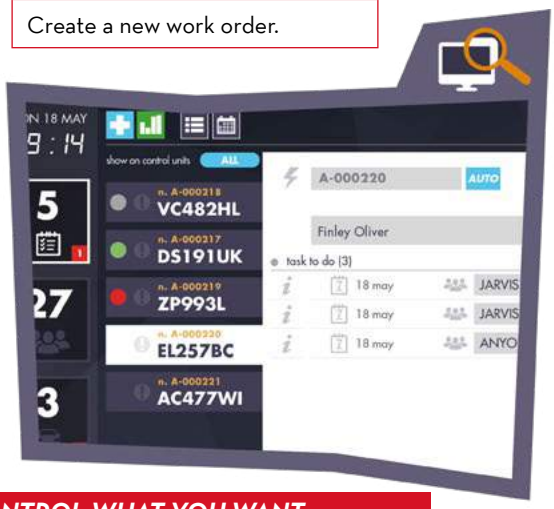

CONTROL WHAT YOU WANT

Select the tasks to include in the work order.

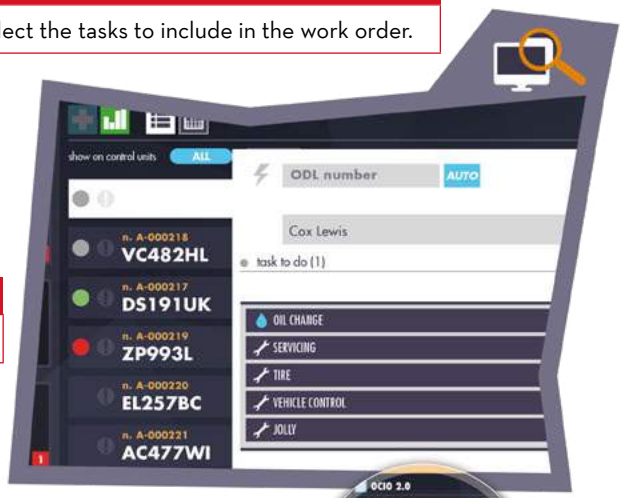

DATA MANAGEMENT

Manage customers&vehicles master data.

AGENDA

Define a weekly agenda.

MCO 2.0 is a network based system. This means that different people and multiple terminals can manage the organization, while remaining constantly synchronized. Already got a DMS to manage your work orders? No problem: MCO 2.0 will interface easily with your legacy application and remain synchronized with the data so you can continue to exploit the functions of both applications.

TECHNICAL DATA

CODE	DESCRIPTION	CONNECTION
F00774000	MCO 2.0 CLIENT SOFTWARE (USB VERSION)*	/
F00774010	MCO 2.0 BUSINESS ENTRY SOFTWARE (USB VERSION)	/
F00774020	MCO 2.0 BUSINESS SUITE SOFTWARE (USB VERSION)	/
F00774200	MCO 2.0 CLIENT SOFTWARE (WEB EDITION)*	/
F00774210	MCO 2.0 BUSINESS ENTRY SOFTWARE (WEB EDITION)	/
F00774220	MCO 2.0 BUSINESS SUITE SOFTWARE (WEB EDITION)	/

(*) THE PURCHASE OF ADDITIONAL CLIENT LICENSES ENABLES YOU TO USE THE VARIOUS VERSIONS OF MCO 2.0 ON MULTIPLE WORKSTATIONS

SOFTWARE MCO 2.0

CLOUD SOFTWARE MCO GO

FEATURES

- *IN CLOUD*
- *DETAILED ANALISYS AND REPORT*
- *TANK WATCHDOG*
- *DATA EXPORT*

For a more detailed analysis of the reports, MCO GO can be integrated with the CLOUD SOFTWARE MCO GO that allows a verification and a detailed analysis of all operations:

- filter the data by the most interesting information and immediately notice any anomalies;
- sum up different records according to your requirements;
- verify the jobs on a daily or weekly basis for a better overview of all activities;
- monitor the calculated tanks' volume*;
- export the results of any single day.

PERFORMANCE

ALWAYS AVAILABLE	DATA
DETAILED REPORTS	MONITORING
TANK WATCHDOG	CONTROL

CONSOLIDATE DATA
From different **CU** and **workshops**

REPORT
Detailed analysis of all data

TANK MONITORING
Monitor the **calculated tanks' volumes***

*Updated with each data syncronization

TECHNICAL DATA

CODE	DESCRIPTION
F00774300	CLOUD MCO GO - 1 YEAR - 4 CU
F00774310	CLOUD MCO GO - 1 YEAR - UNLIMITED CU
F00774320	CLOUD MCO GO - 3 YEARS - 4 CU
F00774330	CLOUD MCO GO - 3 YEARS - UNLIMITED CU
F00774340	CLOUD MCO GO - ONE FEE TIME - 4 CU
F00774350	CLOUD MCO GO - ONE TIME FEE - UNLIMIT CU

CLOUD SOFTWARE MCO GO

CONTROL UNIT 2.0

FEATURES

- *RUGGED CASE (MOBILE VERSION)*
- *TOUCHSCREEN DISPLAY*
- *READY TO USE*
- *WALL VERSION*

The CONTROL UNIT 2.0 is the MCO2.0 system operator interface. It is available in 2 different versions: mobile and fixed. It allows to scroll through the Work Orders list which is constantly updated by the system.

PERFORMANCE

WI-FI/LAN	TOUCH-SCREEN
CONNECTION SYSTEM	DISPLAY
100-240V VOLTAGE	
POWER	

WORK PLAN

The touchscreen device allows the operator to **scroll through the tasks list**, which is constantly updated in real time. Particularly urgent **work orders** can be highlighted.

PIN NUMBER

To **identify the operator** who is performing a task at any time.

MANAGEMENT

With just a click the operator can **accept the work task**, displaying all the details and specifying, if necessary, **which fluid** will be used and the **preset quantity**. On completion, each work task is closed and recorded.

PACKAGING

CODE	WEIGHT		PACKAGING			
	KG	LBS	MM	INCH	PCS/PALLET	PCS/BOX
F00776010	2,2		390X290X140		-	1
F00776008	2,9		390X290X140		-	1

CAMERA

Document the repairs with notes and photos.

IN THE BOX

- CONTROL UNIT 2.0
- INSTRUCTION MANUAL

DETAILS

RUBBER PROTECTION

TOUCHSCREEN DISPLAY

HEAVY DUTY DESIGN

TASK SELECTION

All data relating to the task are displayed on **one line**.

FLEXIBILITY

The operators can add work orders and tasks directly from the **CONTROL UNIT** 2.0, using the flexible system and keeping track of every action taken.

CONTROL UNIT 2.0 is available in a wall-mounted version or in the MOBILE CONTROL UNIT 2.0 version. All work orders and task information are optional, in order to enable an operation in a few seconds.

TECHNICAL DATA

CODE	DESCRIPTION	VOLTAGE	CONNECTION
F00776010	CONTROL UNIT MOBILE 2.0	100 - 240 V 50 - 60 HZ	WI-FI
F00776008	CONTROL UNIT 2.0	100 - 240 V 50 - 60 HZ	WI-FI / LAN

CONTROL UNIT 2.0

DONGLE 2.0

FEATURES

- NO POWER NEEDED
- 3 MODES OF OPERATION

The PIUSI DONGLE 2.0 is a remote Wi-Fi device that, once connected to a monitor, becomes a remote display of the MCO 2.0 system showing all the activities in real time.

SUPERVISION

PIUSI DONGLE 2.0 is a remote Wi-Fi device that allows simple connection to a normal monitor or TV in order to show all current garage activities in real time.

PERFORMANCE

WI-FI	HDMI
CONNECTION SYSTEM	MONITOR CONNECTION

WORK-ORDERS VIEW

The various possibilities of PIUSI DONGLE 2.0 allow you to display either the dispensing operations, work orders and tasks of the day, or the ongoing operations.

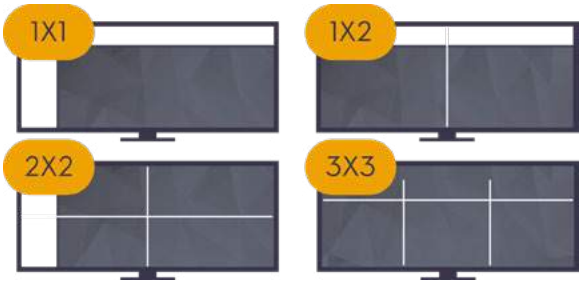

PACKAGING

CODE	WEIGHT		PACKAGING			
	KG	LBS	MM	INCH	PCS/PALLET	PCS/BOX
F00776020	0,2		280X130X60		-	1

ALL IN REAL TIME

PIUSI DONGLE 2.0 is fully automatic and displays the data you need in real time.

ALL IN REAL TIME

Monitor the proper functioning of your GPV 2.0 and tanks.

IN THE BOX

- DONGLE 2.0
- INSTRUCTION MANUAL

CONTROL

Check which **vehicles** are **undergoing** repairs during the day and which tasks are required.

MAXIMUM COMPATIBILITY

PIUSI DONGLE 2.0 is compatible with monitors of any format, provided they feature an HDMI port.

The MCO 2.0 system supports multiple PIUSI DONGLE 2.0 devices. You can use a large size monitor to display work tasks in a central area at your premises, with other smaller monitors installed in each work area to keep track of dispensing operations.

PENDING-ACTIVE

The "airport" information board view shows **pending work orders** and those in **progress**.

TECHNICAL DATA

CODE	DESCRIPTION	CONNECTION
F00776020	PIUSI DONGLE	WI-FI

DONGLE 2.0

OCIO 2.0

FEATURES

- LOW/HIGH LEVEL ALARMS
- FLUID QUANTITY INDICATION
- FLUID HEIGHT INDICATION
- BUILT-IN DISPLAY
- COMPATIBLE WITH SSM 2.0, MCO 2.0 AND B.SMART

With its brand-new design, OCIO 2.0 by PIUSI is the upgraded version of the tank level indicator compatible with SSM 2.0 and MCO 2.0 systems. It requires a LAN/Wi-Fi connection to communicate with the software. It maintains all the performances of the standard OCIO. Thanks to its interchangeable probe, OCIO 2.0 is compatible with several fluids.

PERFORMANCE

1%	UP TO 4MT HEIGHT
ACCURACY	TANK
UP TO 50 MT LENGTH	UP TO 30 CST
PROBE TUBE	VISCOSITY

OCIO 2.0

10 METERS HOSE

BRASS PROBE

PACKAGING

CODE	WEIGHT		PACKAGING		
	KG	LBS	MM	INCH	PCS/BOX
F0075526O	2,2	4,8	300X410X100	11,8X16,1X3,9	1
F0075522O	2,2	4,8	300X410X100	11,8X16,1X3,9	1
F0075521A	2,2	4,8	300X410X100	11,8X16,1X3,9	1

CONNECTION

IN THE BOX

- OCIO 2.0 UNIT
- PROBE
- 10 MT TUBE
- INSTRUCTION MANUAL

DETAILS

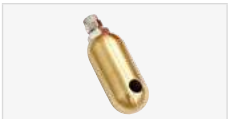

BRASS PROBE

2 ALARMS

SSM 2.0 SELF SERVICE MANAGEMENT

SSM 2.0 SOFTWARE

FUNCTIONING

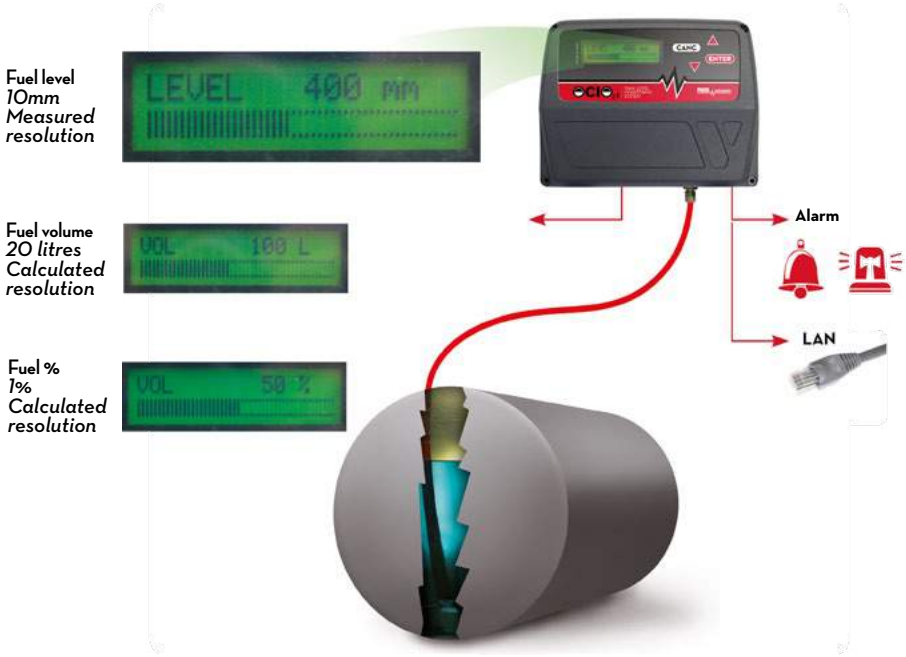

MATERIALS

- PROBE: BRASS
- TUBE: TECHNOPOLYMER

TECHNICAL DATA

CODE	DESCRIPTION	FLUIDS TYPE	VISCOSITY	VOLTAGE		RS EXIT
			cSt	AC V./HZ	POWER WATT	
F00755260	LEVEL INDICATOR OCIO LAN 2.0	A B D O W W	UP TO 30	230-50/60	20	REQUIRED
F00755220	LEVEL INDICATOR OCIO RS485 2.0	A B D O W W	UP TO 30	230-50/60	20	REQUIRED
F00755210	LEVEL INDICATOR OCIO WIFI 2.0	A B D O W W	UP TO 30	230-50/60	20	REQUIRED

CONTROL UNIT MCO GO

FEATURES

- *PLUG&PLAY*
- *CONTROL UNIT/6 DISPENSING LINES*
- *SWITCH INCLUDED*
- *NO NETWORK OR INFRASTRUCTURES*
- *NO SOFTWARE*

MCO GO is entirely managed by the CONTROL UNIT MCO GO: the heart and soul of this system. The interface is simple and intuitive; no particular informatics skills are required.
From here, by simply scrolling the screen, you can:
• start the orders;
• monitor the current transactions, both pending and programmed ones;
• verify the operations are done correctly.
During the operation, the dispensed volume is displayed and may also be printed with the connected printer (optional). Every CONTROL UNIT MCO GO is able to handle up to 6 dispensing lines with no need for software or complex infrastructures.

PERFORMANCE

UP TO **6** FOR EACH CU DISPENSING LINES	**8** INCLUDED PORTS SWITCH
NO **WI-FI / LAN** CONNECTION	**PLUG&PLAY** INSTALLATION

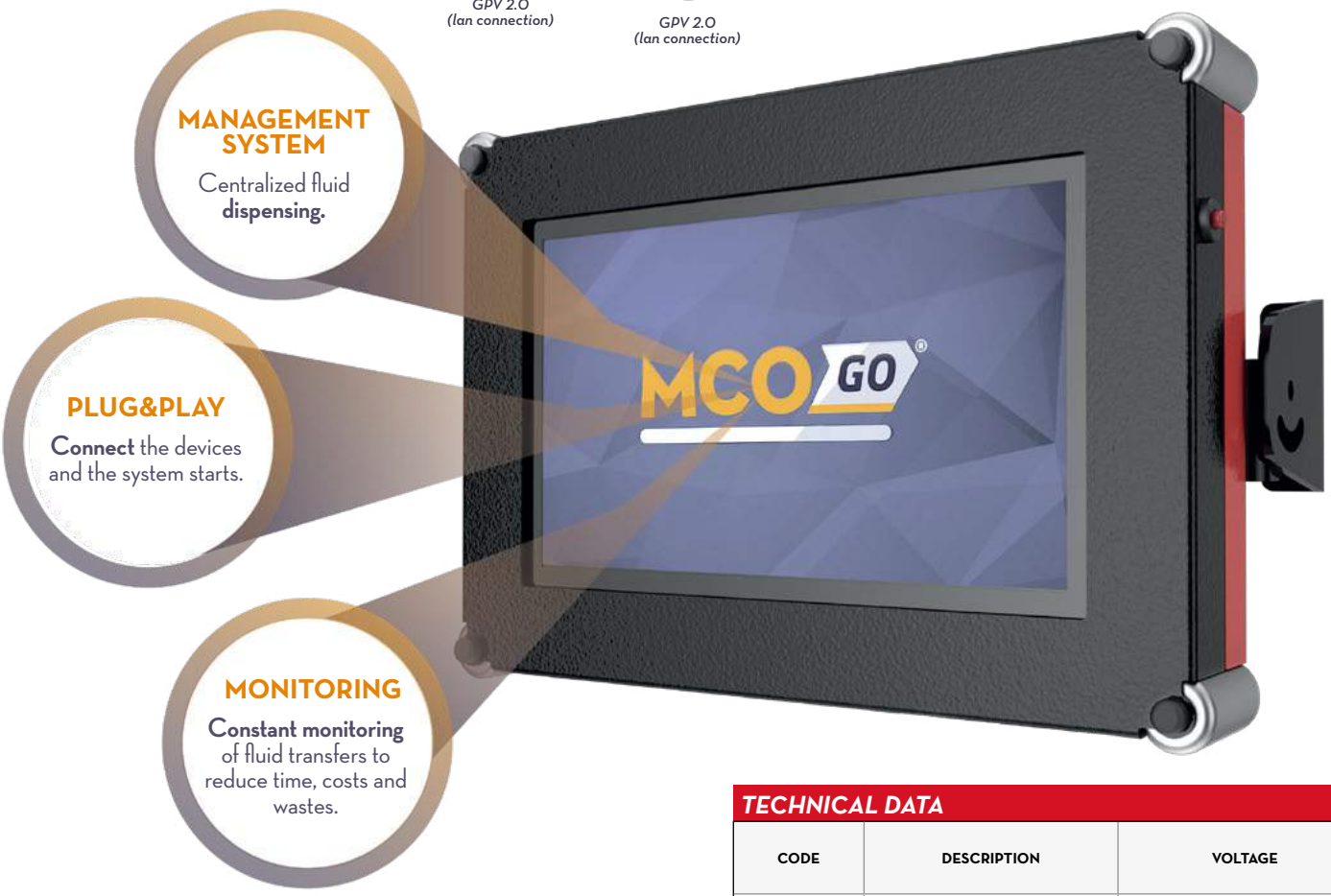

TECHNICAL DATA

CODE	DESCRIPTION	VOLTAGE
F00776C00	CONTROL UNIT MCO GO	100 - 240 V 50 - 60 HZ

CONTROL UNIT MCO GO

EASY VIEW 2.0

FEATURES

- BALANCED VALVE
- LIGHT PRESSURE LEVER
- ERGONOMIC GRAB
- BUILT-IN FILTER
- BUILT-IN LEVER LOCK

The PIUSI EASY VIEW 2.0 is the MCO 2.0 version of the EASY OIL nozzle. Attached to this manual nozzle, suitable for the delivery of a wide range of oils, there is a remote display that shows the count made by the GPV 2.0.

TECHNOLOGY

The key to the dispensing system is the clear dialogue between GPV 2.0 and the entire MCO 2.0 system, plus the wireless communication between the GPV 2.0 solenoid valve and the EASY VIEW 2.0 nozzle. Optimized integration down to the tiniest detail.

ENHANCED ERGONOMICS

The nozzle **design** has been further **improved.**

PERFORMANCE

UP TO 30 L/MIN	70 BAR
FLOW RATE	OPERATING PRESSURE

ZIGBEE SYSTEM
CONNECTION

TECHNOLOGY

EASY VIEW 2.0 is a more practical and intelligent nozzle.
The large size display shows the dispensing data transmitted on a wireless connection (zigbee) from the associated GPV 2.0.
This means the nozzle no longer needs an internal flow meter, resulting in significant weight reduction and less risk of damage.

RUGGED CONSTRUCTION

High strength and **performance** are the core **properties** of the Easy view nozzle.

PACKAGING

CODE	WEIGHT		PACKAGING			
	KG	LBS	MM	INCH	PCS/PALLET	PCS/BOX
F00779010	1,16		450X180X90		-	1
F00779000	1,16		450X180X90		-	1

CHART

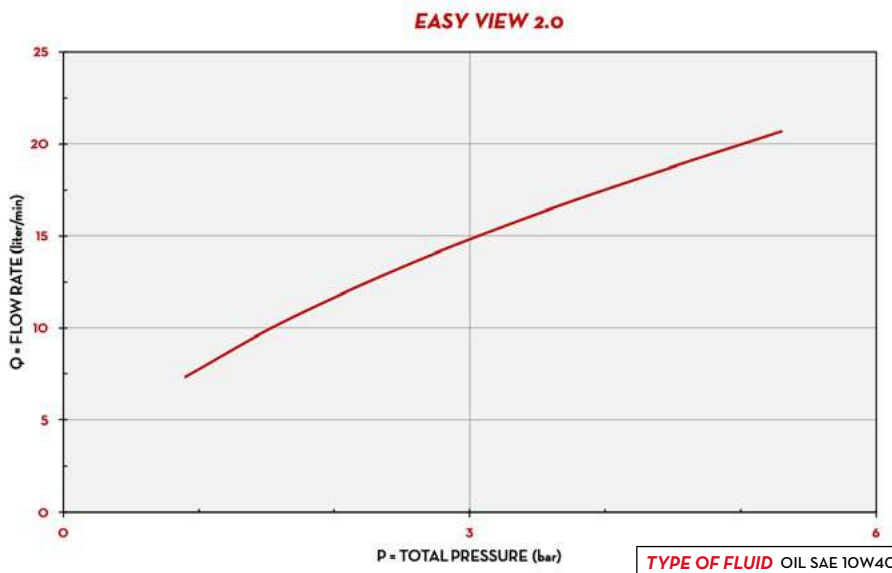

TYPE OF FLUID	OIL SAE 10W40
TEMPERATURE	23 °C

IN THE BOX

- EASY VIEW 2.0 NOZZLE
- INSTRUCTION MANUAL

DETAILS

1/2" INLET

ALLUMINIUM BODY

ANTI-SHOCK HANDGRIP

MATERIALS

- BODY: ALLUMINIUM
- VALVE: NBR, NICKEL PLATED STEEL, BRASS

TECHNICAL DATA

CODE	DESCRIPTION	FLUIDS TYPE	FLOW RATE L/MIN	CONNECTION	INLET
F00779010	EASY VIEW RIGID	O	UP TO 30	ZIGBEE (TO GPV 2.0)	1/2" BSP
F00779000	EASY VIEW FLEXIBLE	O	UP TO 30	ZIGBEE (TO GPV 2.0)	1/2" BSP

GPV 2.0

FEATURES

- READY TO USE
- COMPATIBLE WITH ALL FLUIDS (UNIVERSAL VERSION ONLY)
- QUICK RETROFIT INSTALLATION
- ADBLUE AND DIESEL VERSIONS NOW AVAILABLE

The GPV 2.0 is the MCO 2.0 version of the well known PIUSI GPV. It includes a built-in solenoid valve and an oval gear meter, everything in a single device. It is available in several versions based on the fluid you need to control.

PERFORMANCE

UP TO 30 L/MIN	± 0,5%
FLOW RATE	ACCURACY

LAN/WI-FI
CONNECTION SYSTEM

PACKAGING

CODE	WEIGHT		PACKAGING			
	KG	LBS	MM	INCH	PCS/PALLET	PCS/BOX
F0044601A	3	6,6	180X180X170	7,1X7,1X6,7	-	1
F0044600A	3	6,6	180X180X170	7,1X7,1X6,7	-	1
F0044606A	5,7	12,5	350X180X260	13,8X7,1X10,2	-	1
F0044603O	3	6,6	180X180X170	7,1X7,1X6,7	-	1
F0044607O	4,3	9,5	350X180X260	13,8X7,1X10,2	-	1
F0044608O	4,3	9,5	350X180X260	13,8X7,1X10,2	-	1
F0044605O	3	6,6	180X180X170	7,1X7,1X6,7	-	1

CHART

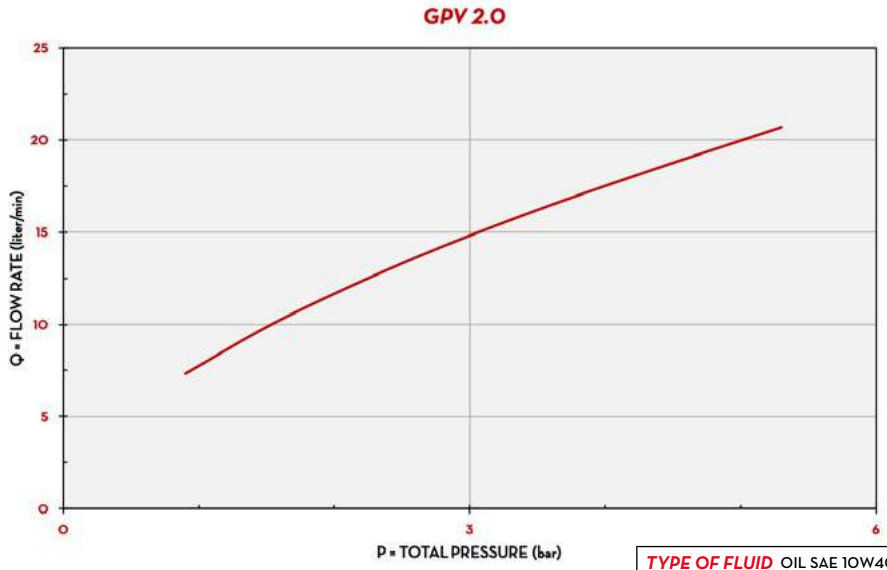

TYPE OF FLUID	OIL SAE 10W40
TEMPERATURE	23 °C

IN THE BOX

- GPV 2.0 UNIT
- INSTRUCTION MANUAL

MATERIALS

- GEARS: TECHNOPOLYMER
- BODY: ALLUMINIUM
- TOPPING: NBR
- VALVE: NBR, NICKEL PLATED STEEL, BRASS

TECHNICAL DATA

CODE	DESCRIPTION	FLUIDS TYPE	FLOW RATE		VOLTAGE		CONNECTION
			L/MIN	GPM	AC V./HZ	POWER WATT	
F0044601A	GPV 2.0 - BI VALVE NEW	O	30	7,9	100-240 V/ 50-60 HZ	25	WI-FI / LAN
F0044600A	GPV 2.0 - SINGLE VALVE NEW	O	30	7,9	100-240 V/ 50-60 HZ	25	WI-FI / LAN
F0044606A	GPV 2.0 SINGLE VALVE - KIT REMOTE-NEW	O	30	7,9	100-240 V/ 50-60 HZ	25	WI-FI / LAN
F0044603O	GPV 2.0 - SINGLE VALVE - WINDSCREEN	W	30	7,9	100-240 V/ 50-60 HZ	25	WI-FI / LAN
F0044607O	GPV 2.0 - SINGLE VALVE - ADBLUE	Ad	5 - 120	1,3 - 1,6	100-240 V/ 50-60 HZ	25	WI-FI / LAN
F0044608O	GPV 2.0 - SINGLE VALVE - DIESEL	D	10 - 100	1,3 - 31,6	100-240 V/ 50-60 HZ	25	WI-FI / LAN
F0044605O	GPV2.0-UNIVERSAL VALVE/PULSER CONTROLLER	ANY	-	-	100-240 V/ 50-60 HZ	25	WI-FI / LAN

SHALL BE COMPLETED WITH A SUITABLE VALVE AND PULSER

FLUID MONITORING ACCESSORIES

COMPONENTS

SOFTWARE MCO 2.0	CODE	DESCRIPTION
	F2002100A	TICKET PRINTER WIFI MCO 2.0
	F20086000	INSTALLER KIT MCO 2.0

F2002100A F20086000

CONTROL UNIT 2.0	CODE	DESCRIPTION
	F1226201A	KIT KEY READER
	F1590400A	KIT DRIVER KEY YELLOW (10PCS)
	F20089000	BARCODE READER USB MCO 2.0
	F20112000	KIT WALL MOUNT BRACKET CU "MCO 2.0"
	F20592000	LAN ADAPTER MCO 2.0

F20089000 F20592000 F20112000

F1226201A F1590400A

OCIO 2.0	CODE	DESCRIPTION
	F12939000	OIL KIT
	F15611000	STAINLESS STEEEL PROBE FOR ADBLUE - OCIO
	F1391300A	HOSE KIT OCIO L=50MT

F1391300A F15611000 F12939000

A1
MCO 20
A1 1 2 3 4
注意
记得
关手枪
ATTENTION
Off oil gun
after user

TANK MONITORING

OCIO

FEATURES

- LOW/HIGH LEVEL ALARMS
- FLUID MEASURES INDICATION
- BUILT-IN DISPLAY

OCIO is PIUSI's tank level indicator suitable for any kind of fluid storage in tanks up to a 4 mt depth. It gives a real time indication of the fluid quantity inside the tank. It is easy to calibrate and has two alarms that can be adjusted at a specific high and low level for high and low levels.

PERFORMANCE

1% FULL SCALE ACCURACY	UP TO 4MT HEIGHT TANK
UP TO 50 MT LENGTH PROBE TUBE	UP TO 30 CST VISCOSITY

OCIO

10 METERS HOSE

BRASS PROBE

PACKAGING

CODE	WEIGHT		PACKAGING		
	KG	LBS	MM	INCH	PCS/BOX
FO075510D	2,2	4,8	300X410X100	11,8X16,1X3,9	1
FO075516O	2,2	4,8	300X410X100	11,8X16,1X3,9	1

CHART

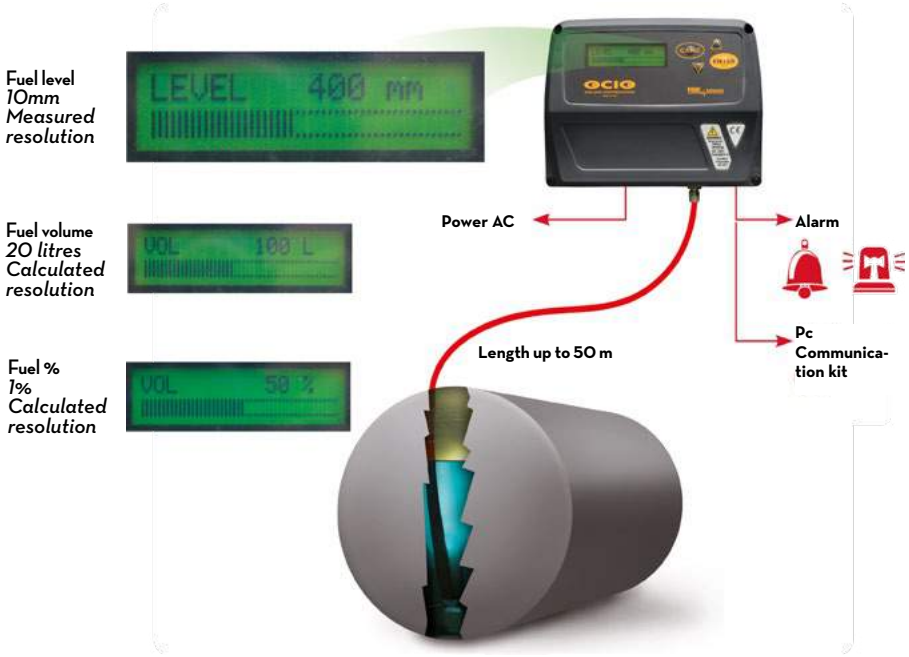

IN THE BOX

- OCIO UNIT
- PROBE
- 10 MT TUBE
- INSTRUCTION MANUAL

DETAILS

BRASS PROBE

2 ALARMS

DIMENSIONS

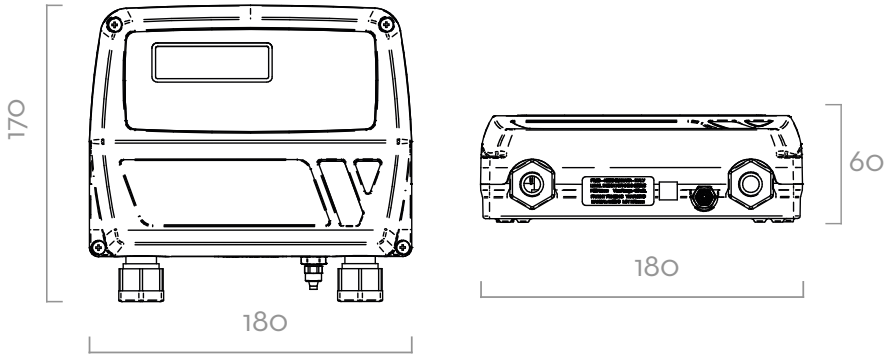

MATERIALS

- PROBE: BRASS
- TUBE: TECHNOPOLYMER

Dimensions expressed in millimeters

TECHNICAL DATA

CODE	DESCRIPTION	FLUIDS TYPE	VISCOSITY	VOLTAGE		RS EXIT
			cSt	AC V./HZ	POWER WATT	
FOO75510D	LEVEL INDICATOR OCIO LV / RS OUTPUT	A B D O W W	UP TO 30	230/50	20	AVAILABLE
FOO75516O	LEVEL INDICATOR OCIO LV / 4/20 mA OUTPUT	A B D O W W	UP TO 30	230/50	20	AVAILABLE

TANK MONITORING ACCESSORIES

TANK LEVEL INDICATOR

OCIO	CODE	DESCRIPTION
	F12939000	KIT OIL TUBE - OCIO
	F15611000	STAINLESS STEEEL PROBE FOR ADBLUE - OCIO

F12939000

F15611000

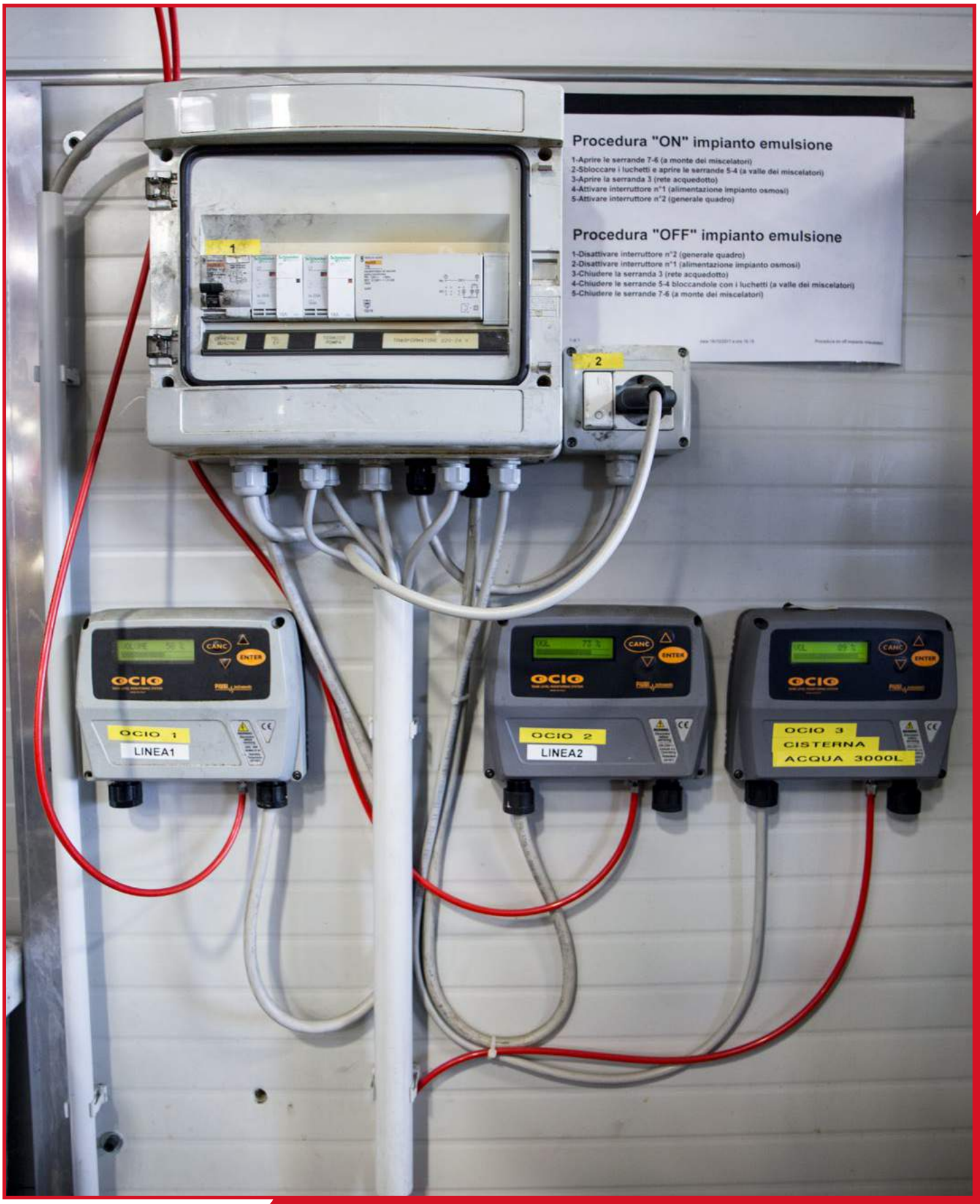
Procedura "ON" impianto emulsione
1-Aprire le serrande 7-6 (a monte dei miscelatori)
2-Sbloccare i luchetti e aprire le serrande 5-4 (a valle dei miscelatori)
3-Aprire la serranda 3 (rete acquedotto)
4-Attivare interruttore n°1 (alimentazione impianto osmosi)
5-Attivare interruttore n°2 (generale quadro)
Procedura "OFF" impianto emulsione
1-Disattivare interruttore n°2 (generale quadro)
2-Disattivare interruttore n°1 (alimentazione impianto osmosi)
3-Chiudere la serranda 3 (rete acquedotto)
4-Chiudere le serrande 5-4 bloccandole con i luchetti (a valle dei miscelatori)
5-Chiudere le serrande 7-6 (a monte dei miscelatori)
1
2
OCIO 1
LINEA1
OCIO 2
LINEA2
OCIO 3
CISTERNA
ACQUA 3000L

HOSE REELS

OIL HOSE REEL

FEATURES

- HEAVY DUTY SPRING
- HAND PROTECTION (ON REQ.)
- LONG LASTING
- STEEL HUB

The PIUSI OIL HOSE REEL is an automatic open hose reel for oil, entirely Made in Italy, which includes a built-in heavy duty spring. It can be installed on a wall or inside a closed cabinet and it is suitable for any kind of oil.

PERFORMANCE

MAX	MAX BOUND
60 BAR	20M
OPERATING PRESSURE	HOSE LENGTH

OPEN OIL HOSE REEL HEAVY DUTY
(hand protection on request)

OPEN OIL HOSE REEL

PACKAGING

CODE	WEIGHT		PACKAGING			N. BOXES/ EUROPALLET	
	KG	LBS	MM	PCS/PALLET	PCS/BOX	✈	🚢
WITHOUT HOSE							
HN60151200A	14	30,8	550X200X540		1	12	20
HN60153800A	14	30,8	550X200X540		1	12	20
HN60201200A	14	30,8	550X260X540		1	12	20
WITH HOSE							
HA60101208	16	35,2	550X200X540		1	12	20
HA60151208	19	41,9	550X200X540		1	12	20
HA60201208	25	55	550X260X540		1	12	20
HA60153400A	27	60	550X260X540		1	12	20
HA60101000A	25	55	550X260X540		1	12	20
HA60203400A	45	99	640X250X640		1	12	20

INSTALLATION

Different ways to install PIUSI's hose reels: they can be easily placed wherever you need them without any problem about functionality and safety.
PIUSI's products are without a doubt designed to support your work in any condition.

ROOF INSTALLATION

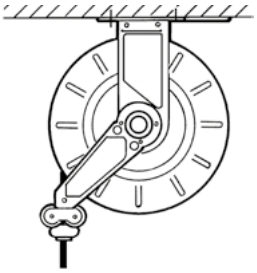

WALL INSTALLATION

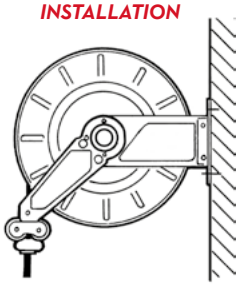

GROUND INSTALLATION

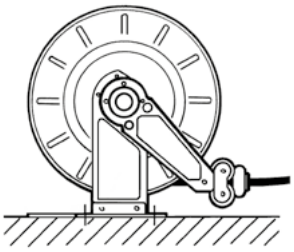

IN THE BOX

- OIL HOSE REEL
- WALL MOUNT BRACKET
- INSTRUCTION MANUAL

DIMENSIONS

MODEL	OPEN HOSE REEL BIG	OPEN HOSE REEL SMALL
A	495	475
B	460	460
C	152	102
D	200	150
E	246	196
F	150	150
G	200	150
H	12	12

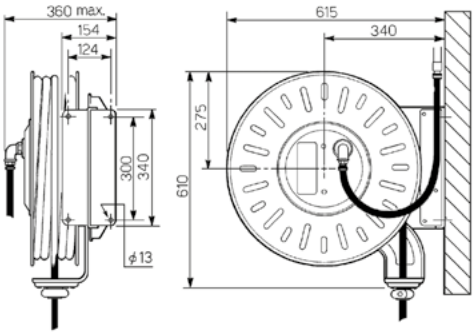

OPEN OIL HOSE REEL HEAVY DUTY

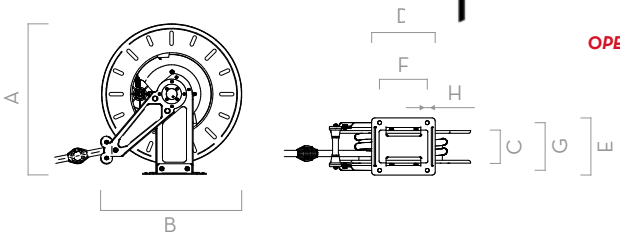

Measures expressed in millimeters

DETAILS

AUTOMATIC HOSE REELS

4 ROLLS HOSE GUIDE

DIFFERENT INSTALLATIONS

PROTECTION ON REQUEST

MATERIALS

- BODY: CAST IRON
- HUB: SYNTHERED STEEL
- TUBE: RUBBER

TECHNICAL DATA

CODE	DESCRIPTION	FLUIDS TYPE	HOSE	MAX WORKING PRESSURE	PRESSURE DROP	INLET WITH SWIVEL	OUTLET HOSETAIL	HOSE MAX LENGHT BOUND	HOSE LENGHT
			BSP	BAR	BAR	BSP	BSP	M	M
WITHOUT HOSE									
HN60151200A	REEL OPEN 60B W/O ½" MAX 15M OIL ($)	O	1/2"	60	-	1/2" MALE	1/2" MALE	15	-
HN60153800A	REEL OPEN 60B W/O 3/8" MAX 15M OIL ($)	O	3/8"	60	-	3/8" FEMALE	3/8" FEMALE	15	-
HN60201200A	REEL OPEN 60B W/O ½" MAX 20M OIL ($)	O	1/2"	60	-	1/2" MALE	1/2" MALE	20	-
WITH HOSE									
HA6010120B	REEL O 60B W/½" 33FT/10MT OIL NPT/BSP	O	1/2"	60	10 @ 30 L/MIN*	1/2" MALE	1/2" MALE	-	10
HA6015120B	REEL O 60B W/½" 50FT/15MT OIL NPT/BSP	O	1/2"	60	16 @ 30 L/MIN*	1/2" MALE	1/2" MALE	-	15
HA6020120B	REEL OPEN 60B W/½" 65F/20M OIL NPT/BSP	O	1/2"	60	25 @ 30 L/MIN*	1/2" MALE	1/2" MALE	-	20
HA60153400A	REEL OPEN 60B W/ ¾" 15MT OIL ($)	O	3/4"	60	4,5 @ 30 L/MIN*	1" MALE	3/4" MALE	-	15
HA60101000A	REEL OPEN 60B W/ 1" 10MT OIL	O	1"	60	2 @ 30 L/MIN*	1" MALE	1" MALE	-	10
HA60203400A	REEL OPEN60B ¾" 20MT OIL IN/HOSE 1M($)	O	3/4"	60	-	3/4" FEMALE	3/4" FEMALE	-	20

(*) PRESSURE DROP FOR OIL 200 CST

OIL HOSE REEL

GREASE HOSE REEL

FEATURES

- HEAVY DUTY SPRING
- HAND PROTECTION (ON REQ.)
- WIDE RANGE OF PRODUCTS
- LONG LASTING
- STEEL HUB
- HIGH PRESSURE

The PIUSI GREASE HOSE REEL is an automatic open hose reel specific for grease. Manufactured accordingly to the most demanding requirements, it is suitable for all grease heavy duty applications.

PERFORMANCE

MAX 400 BAR	15M
OPERATING PRESSURE	HOSE LENGTH

OPEN GREASE HOSE REEL
(hand protection on request)

PACKAGING

CODE	WEIGHT		PACKAGING		
	KG	LBS	MM	PCS/PALLET	PCS/BOX
WITHOUT HOSE					
HN40151400A	14	30,8	550X200X540		1
HN40153800A	14	30,8	550X200X540		1
WITH HOSE					
HA40151400	27	60	550X260X540		1
HA40153800A	25	55	550X260X540		1

INSTALLATION

Different ways to install PIUSI's hose reels: they can be easily placed wherever you need them without any problem about functionality and safety.
PIUSI's products are without a doubt designed to support your work in any condition.

ROOF INSTALLATION

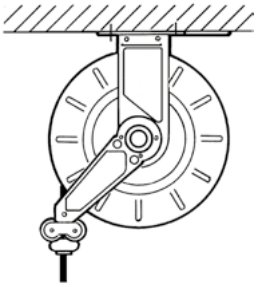

WALL INSTALLATION

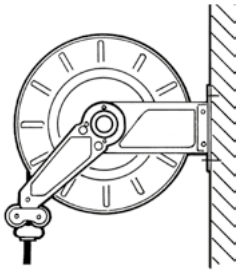

GROUND INSTALLATION

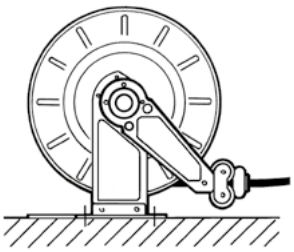

IN THE BOX

- GREASE HOSE REEL
- WALL MOUNT BRACKET
- INSTRUCTION MANUAL

DETAILS

AUTOMATIC HOSE REEL

4 ROLLS HOSE GUIDE

DIFFERENT INSTALLATIONS

PROTECTION ON REQUEST

DIMENSIONS

MODEL	OPEN HOSE REEL SMALL
A	475
B	460
C	102
D	150
E	196
F	150
G	150
H	12

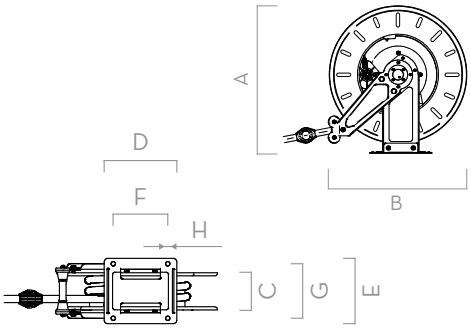

Dimensions expressed in millimeters

MATERIALS

- BODY: CAST IRON
- HUB: SYNTHERED STEEL
- TUBE: RUBBER

TECHNICAL DATA

CODE	DESCRIPTION	FLUIDS TYPE	HOSE	MAX WORKING PRESSURE	PRESSURE DROP	INLET WITH SWIVEL	OUTLET HOSETAIL	HOSE MAX LENGHT BOUND	HOSE LENGHT
			BSP	BAR	BAR	BSP	BSP	M	M
WITHOUT HOSE									
HN40151400A	OPEN HOSE REEL 1/4" 15MT SMALL	G	1/4"	400	-	1/4" FEMALE	1/4" FEMALE	15	-
HN40153800A	OPEN HOSE REEL 3/8" 15MT SMALL	G	3/8"	400	-	3/8" FEMALE	3/8" FEMALE	15	-
WITH HOSE									
HA40151400	OPEN HOSE REEL 1/4" + 15MT HOSE SMALL	G	1/4"	400	160 @ 600 GR/MIN*	1/4" FEMALE	1/4" FEMALE	-	15
HA40153800A	OPEN HOSE REEL 3/8" + 15MT HOSE SMALL	G	3/8"	400	140 @ 600 GR/MIN*	3/8" FEMALE	3/8" FEMALE	-	15

(*) PRESSURE DROP FOR GREASE NLGI 2.5 (**) PRESSURE DROP FOR GREASE NLGI 2

GREASE HOSE REEL

AIR/WATER HOSE REEL

FEATURES

- *STURDY METALLIC STRUCTURE*
- *HAND PROTECTION (ON REQ.)*
- *ANTI-FREEZE VERSION*
- *BENDING PROTECTION*

The PIUSI AIR/WATER HOSE REEL is an automatic open hose reel specific for air/water. It is the perfect solution to manage the dispensing of these kind of liquids/gases. It comes with a sturdy hand protection cover to avoid any possible injury during use.

PERFORMANCE

MAX 20 BAR	15M
OPERATING PRESSURE	HOSE LENGTH

OPEN AIR/WATER HOSE REEL
(hand protection on request)

PACKAGING

CODE	WEIGHT		PACKAGING			
	KG	LBS	MM	INCH	PCS/PALLET	PCS/BOX
WITH HOSE						
HA20151200A	17	37,4	550X200X540	21,6X7,9X21,3		1
HA20153800A	17	37,4	550X200X540	21,6X7,9X21,3		1

INSTALLATION

Different ways to install PIUSI's hose reels: they can be easily placed wherever you need them without any problem about functionality and safety.
PIUSI's products are without a doubt designed to support your work in any condition.

ROOF INSTALLATION

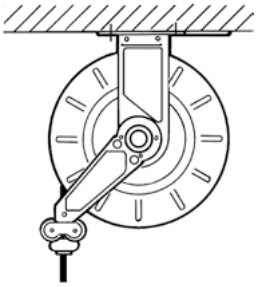

WALL INSTALLATION

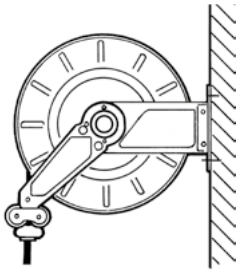

GROUND INSTALLATION

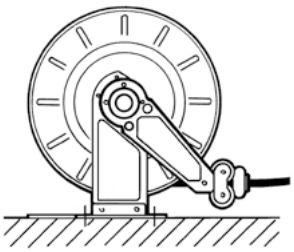

IN THE BOX

- AIR/WATER HOSE REEL
- WALL MOUNT BRACKET
- HAND PROTECTION
- INSTRUCTION MANUAL

DETAILS

AUTOMATIC HOSE REEL

4 ROLLS HOSE GUIDE

DIFFERENT INSTALLATIONS

PROTECTION ON REQUEST

DIMENSIONS

MODEL	OPEN HOSE REEL SMALL
A	475
B	460
C	102
D	150
E	196
F	150
G	150
H	12

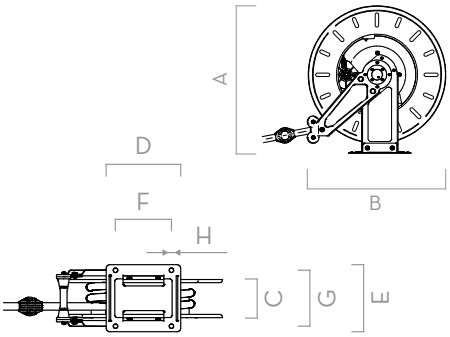

Dimensions expressed in millimeters

MATERIALS

- BODY: CAST IRON
- HUB: SYNTHERED STEEL
- TUBE: RUBBER

TECHNICAL DATA

CODE	DESCRIPTION	FLUIDS TYPE	HOSE	MAX WORKING PRESSURE	PRESSURE DROP	INLET WITH SWIVEL	OUTLET HOSETAIL	HOSE MAX LENGHT BOUND	HOSE LENGHT
			BSP	BAR	BAR	BSP	BSP	M	M
WITH HOSE									
HA20151200A	OPEN HOSE REEL 1/2" + 15MT HOSE SMALL	A W A	1/2"		-	1/2" MALE	1/2" MALE	-	15
HA20153800A	OPEN HOSE REEL 3/8" + 15MT HOSE SMALL	A W A	3/8"		-	3/8" FEMALE	3/8" FEMALE	-	15

AIR/WATER HOSE REEL

OIL HOSE REEL

FEATURES

- STURDY METALLIC STRUCTURE
- COMPACT DESIGN
- HEAVY DUTY SPRING
- LONG LASTING STEAL HUB

The PIUSI OIL HOSE REEL is an automatic closed hose reel for oil. Entirely Made in Italy, it is the perfect solution for managing the dispense of any kind of lubricant. Its sturdy closed structure makes this equipment ready to be fitted on a wall or into an open cabinet.

PERFORMANCE

MAX 60 BAR	12M
OPERATING PRESSURE	HOSE LENGTH

CLOSED OIL HOSE REEL

PACKAGING

CODE	WEIGHT		PACKAGING			N.BOXES/ EUROPALLET	
	KG	LBS	MM	PCS/PALLET	PCS/BOX	✈	🚢
WITH HOSE							
HC60121200A	19	41,9	550X200X540		1	12	20
WITHOUT HOSE							
HNC60121200	14,5	32,9	550X200X540		1	12	20

INSTALLATION

Different ways to install PIUSI's hose reels: they can be easily placed wherever you need them without any problem about functionality and safety.
PIUSI's products are without a doubt designed to support your work in any condition.

ROOF INSTALLATION

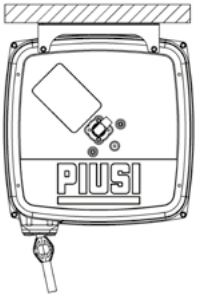

WALL INSTALLATION

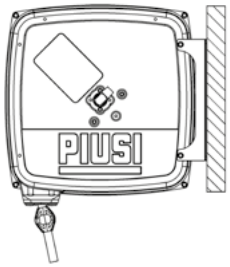

GROUND INSTALLATION

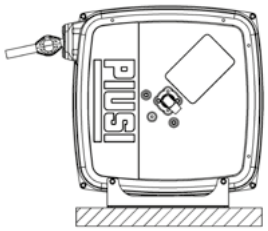

IN THE BOX

- OIL HOSE REEL
- WALL MOUNT BRACKET
- INSTRUCTION MANUAL

DETAILS

4 ROLLS HOSE GUIDE

FIX SUPPORT PLATE

SWIVEL

DIMENSIONS

MODEL	CLOSE HOSE REEL
A	516
B	259
C	491
D	295
E	123
F	90
G	270
H	10,5
I	160

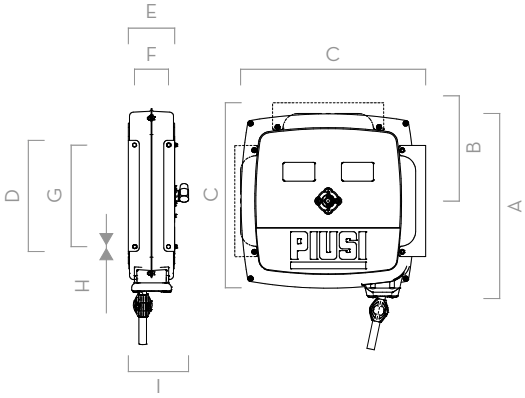

Dimensions expressed in millimeters

MATERIALS

- BODY: CAST IRON
- HUB: SYNTHERED STEEL
- TUBE: RUBBER

TECHNICAL DATA

CODE	DESCRIPTION	FLUIDS TYPE	HOSE	MAX WORKING PRESSURE	PRESSURE DROP	INLET WITH SWIVEL	OUTLET HOSETAIL	HOSE MAX LENGHT BOUND	HOSE LENGHT
			BSP	BAR	BAR	BSP	BSP	M	M
WITH HOSE									
HC60121200A	CLOSED HOSE REEL 1/2" + 12MT HOSE	O	1/2"	60	10@30L/MIN*	1/2" MALE	1/2" MALE	-	12
WITHOUT HOSE									
HNC60121200	CLOSE HOSE REEL 1/2"	O	1/2"	60	10@30L/MIN*	1/2" MALE	1/2" MALE	12	12

(*) PRESSURE DROP FOR OIL 200 CST

OIL HOSE REEL

GREASE HOSE REEL

FEATURES

- *HEAVY DUTY SPRING*
- *LONG LASTING STEAL HUB*
- *HIGH PRESSURE*

The PIUSI GREASE HOSE REEL is an automatic closed hose reel for grease. Manufactured accordingly to the most demanding requirements, it is suitable for all grease heavy duty applications. Its heavy-duty cabinet prevents any possible damage to the inner components and makes this reel long lasting.

PERFORMANCE

MAX 400 BAR	12/15M
OPERATING PRESSURE	HOSE LENGTH

CLOSED GREASE HOSE REEL

PACKAGING

CODE	WEIGHT		PACKAGING			N.BOXES/ EUROPALLET	
	KG	LBS	MM	PCS/PALLET	PCS/BOX	✈	🚢
WITH HOSE							
HC40123800A	20	44	550X200X540		1	12	20
WITHOUT HOSE							
HNC40151400	14,5	32	550X200X540		1	12	20

INSTALLATION

Different ways to install PIUSI's hose reels: they can be easily placed wherever you need them without any problem about functionality and safety.
PIUSI's products are without a doubt designed to support your work in any condition.

ROOF INSTALLATION

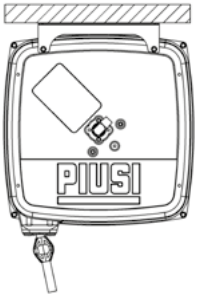

WALL INSTALLATION

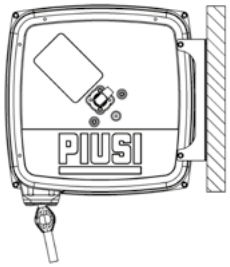

GROUND INSTALLATION

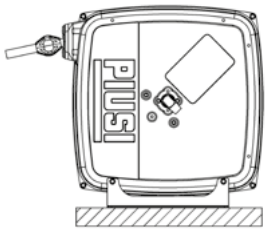

IN THE BOX

- GREASE HOSE REEL
- WALL MOUNT BRACKET
- INSTRUCTION MANUAL

DETAILS

4 ROLLS HOSE GUIDE

FIX SUPPORT PLATE

SWIVEL

DIMENSIONS

MODEL	CLOSE HOSE REEL
A	516
B	259
C	491
D	295
E	123
F	90
G	270
H	10,5
I	160

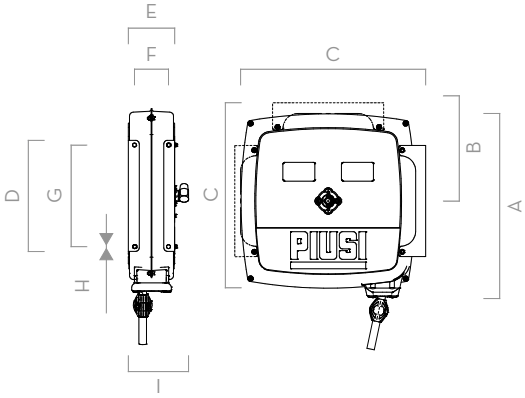

Dimensions expressed in millimeters

MATERIALS

- BODY: CAST IRON
- HUB: SYNTHERED STEEL
- TUBE: RUBBER

TECHNICAL DATA

CODE	DESCRIPTION	FLUIDS TYPE	HOSE	MAX WORKING PRESSURE	PRESSURE DROP	INLET WITH SWIVEL	OUTLET HOSETAIL	HOSE MAX LENGHT BOUND	HOSE LENGHT
			BSP	BAR	BAR	BSP	BSP	M	M
WITH HOSE									
HC40123800A	REEL CLOSED 400B W/3/8" 12MT GREASE	G	3/8"	400	50@600 GR/MIN**	3/8" MALE	3/8" MALE	-	12
WITHOUT HOSE									
HNC40151400	REEL CLOSED 400B W/O 1/4" MAX 15M GREASE	G	1/4"	400	-	1/4" FEMALE	1/4" FEMALE	15	-

(*) PRESSURE DROP FOR GREASE NLGI 2.5 (**) PRESSURE DROP FOR GREASE NLGI 2

GREASE HOSE REEL

AIR/WATER HOSE REEL

FEATURES

- *STURDY METALLIC STRUCTURE*
- *ANTI-FREEZE VERSION*
- *BENDING PROTECTION*

The PIUSI AIR/WATER HOSE REEL is an automatic closed hose reel for air/water. It comes with a sturdy metallic cabinet that ensures any possible corruption of the inner components. It is ready to be fitted on the wall or into an open cabinet.

PERFORMANCE

MAX 20 BAR	12/15M
OPERATING PRESSURE	HOSE LENGTH

CLOSED AIR/WATER HOSE REEL

PACKAGING

CODE	WEIGHT		PACKAGING			N.BOXES/ EUROPALLET	
	KG	LBS	MM	PCS/PALLET	PCS/BOX	✈	🚢
WITH HOSE							
HC20121400A	6	13,2	380X180X270	15X7,1X10,6		1	20
HC20151120OA	6	13,2	380X180X270	15X7,1X10,6		1	20

INSTALLATION

Different ways to install PIUSI's hose reels: they can be easily placed wherever you need them without any problem about functionality and safety.
PIUSI's products are without a doubt designed to support your work in any condition.

ROOF INSTALLATION

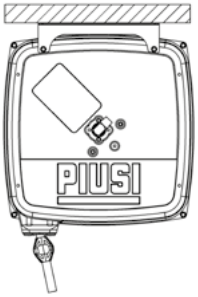

WALL INSTALLATION

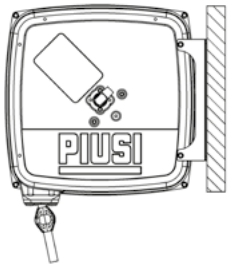

GROUND INSTALLATION

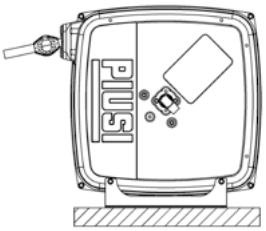

IN THE BOX

- AIR/WATER HOSE REEL
- WALL MOUNT BRACKET
- INSTRUCTION MANUAL

DETAILS

REVOLVING BRACKET

CONNECTION HOSE

SWIVEL

DIMENSIONS

MODEL	CLOSE HOSE REEL	MODEL	CLOSE HOSE REEL
A	374	L	108
B	337	M	79
C	160	N	590
D	30	O	171
E	168.5	P	168
F	205	Q	295
G	312	-	-
H	10.5	-	-
I	187	-	-

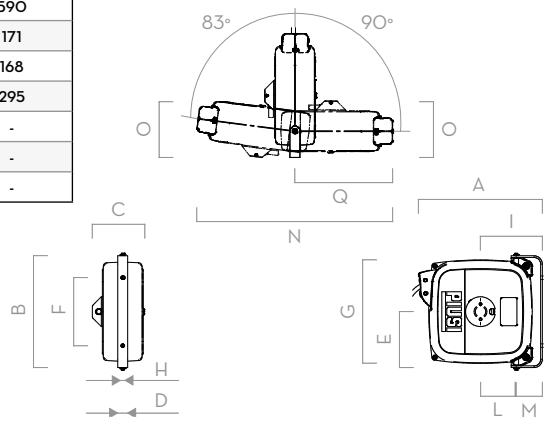

Measures expressed in millimeters

MATERIALS

- BODY: CAST IRON
- HUB: SYNTHERED STEEL
- TUBE: RUBBER

TECHNICAL DATA

CODE	DESCRIPTION	FLUIDS TYPE	HOSE	MAX WORKING PRESSURE	PRESSURE DROP	INLET WITH SWIVEL	OUTLET HOSETAIL	HOSE MAX LENGHT BOUND	HOSE LENGHT
			BSP	BAR	BAR	BSP	BSP	M	M
WITH HOSE									
HC20121400A	CLOSE REEL 10X14 + 12MT HOSE	A W A	10X14	20	-	10 MM	3/4" MALE	-	12
HC201511200A	CLOSE REEL 8X12 + 15MT HOSE	A W A	8X12	20	-	8 MM	1/4" MALE	-	15

AIR/WATER HOSE REEL

HOSE REELS ACCESSORIES

OPEN HOSE REELS

OIL HOSE REEL	CODE	DESCRIPTION
	F1627900A	BIG HOSE REEL ROTATING SUPPORT
	F1629800A	BIG HOSE REEL FIXED BASE
	F1731600A	SMALL HOSE REEL FIXED BASE
	F1731700A	SMALL HOSE REEL ROTATING SUPPORT
	F19973000	HOSE 2M F/F 1/2" 150BAR
	R16745000	COVER SPRING SIDE FOR HOSE REELS
	R20982000	PLASTIC COVER SWIVEL SIDE MOD. V -OSV

F1629800A
F1731600A

F1627900A
F1731700A

F19973000

R16745000

GREASE HOSE REEL	CODE	DESCRIPTION
	F1627900A	BIG HOSE REEL ROTATING SUPPORT
	F1629800A	BIG HOSE REEL FIXED BASE
	F1731600A	SMALL HOSE REEL FIXED BASE
	F1731700A	SMALL HOSE REEL ROTATING SUPPORT
	F19973000	HOSE 2M F/F 1/2" 150BAR
	R16745000	COVER SPRING SIDE FOR HOSE REELS
	R20982000	PLASTIC COVER SWIVEL SIDE MOD. V -OSV

F1629800A
F1731600A

F1627900A
F1731700A

F19973000

R16745000

AIR/WATER HOSE REEL	CODE	DESCRIPTION
	F1627900A	BIG HOSE REEL ROTATING SUPPORT
	F1629800A	BIG HOSE REEL FIXED BASE
	F1731600A	SMALL HOSE REEL FIXED BASE
	F1731700A	SMALL HOSE REEL ROTATING SUPPORT
	F19973000	HOSE 2M F/F 1/2" 150BAR
	R16745000	COVER SPRING SIDE FOR HOSE REELS

F1629800A
F1731600A

F1627900A
F1731700A

F19973000

R16745000

CLOSED HOSE REELS

OIL HOSE REEL	CODE	DESCRIPTION
	F19973000	HOSE 2M F/F 1/2" 150BAR

F19973000

GREASE HOSE REEL	CODE	DESCRIPTION
	F19973000	HOSE 2M F/F 1/2" 150BAR

F19973000

EAD

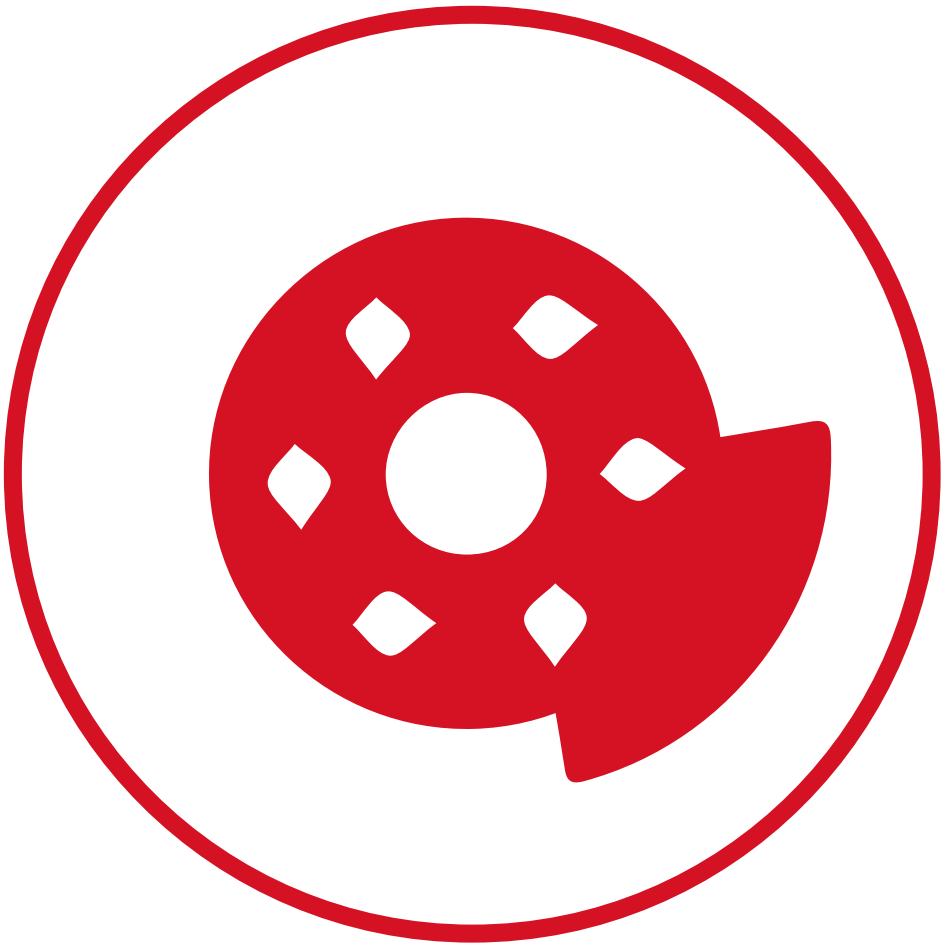

ACCESSORIES

DUMBOX

FEATURES

- *READY TO USE*
- *EXTREMELY PRECISE*
- *ADJUSTABLE SPOUT*
- *SUITABLE FOR ANY LIQUID*

The PIUSI DUMBOX is an immediate way to dispense lubricants. Its adjustable spout, which includes a built-in filter (only funnel version), allows a precise refill operation avoiding any spread of fluid.

PERFORMANCE

UP TO	UP TO
5L	Ø220MM
CAPACITY	FUNNEL

DUMBOX

PACKAGING

CODE	WEIGHT		PACKAGING			
	KG	LBS	MM	INCH	PCS/PALLET	PCS/BOX
CONTAINER						
F00920000	0,8		590X700X575			24
F009117000	6		510X410X540			24
F0091600A	8		510X410X540			50
FUNNEL						
F0093000A	5,8		405X520X540			24
F0093100A	7,8		405X520X535			50

DIMENSIONS

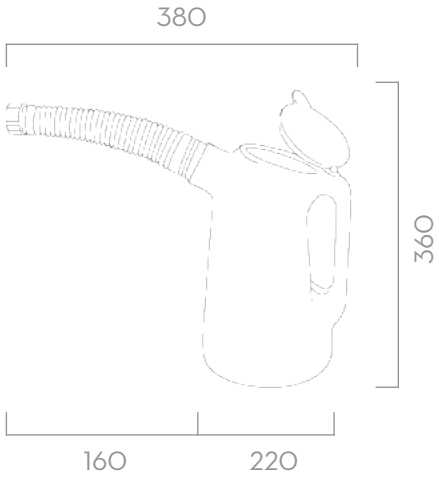

Dimensions expressed in millimeters

IN THE BOX

- DUMBOX

DETAILS

FLEXIBLE

BUILT-IN FILTER

CAP

MATERIALS

- TECHNOPOLYMER

TECHNICAL DATA

CODE	DESCRIPTION	FLUIDS TYPE
CONTAINER		
F00920000	CONTAINER 5 LITRES	O
F00917000	CONTAINER 2 LITRES	O
F0091600A	CONTAINER 1 LITRE	O
FUNNEL		
F0093000A	FUNNEL Ø 180 MM	O
F0093100A	FUNNEL Ø 220 MM	O

DUMBOX

MERCHANDISE

MERCHANDISE

PACKAGING

CODE	DESCRIPTION	WEIGHT		PACKAGING			
		KG	LBS	MM	INCH	PCS/PALLET	PCS/BOX
T-SHIRT BLACK							
PBG000031	PIUSI T-SHIRT BLACK BOX 10 PCS - L	1	-	35X26X18	-	-	10
PBG000032	PIUSI T-SHIRT BLACK BOX 10 PCS - XL	1	-	35X26X18	-	-	10
T-SHIRT WHITE							
PBG000026	PIUSI T-SHIRT WHITE BOX 10 PCS - L	1	-	35X26X18	-	-	10
PBG000027	PIUSI T-SHIRT WHITE BOX 10 PCS - XL	1	-	35X26X18	-	-	10
PBG000029	PIUSI T-SHIRT WHITE BOX 10 PCS - M	1	-	35X26X18	-	-	10
WATER BOTTLE							
PBG000037	PIUSI WATER BOTTLE – BOX 20 PCS	-	-	-	-	-	20
CAP							
PBG000040	PIUSI CAP – BOX 10 PCS	-	-	-	-	-	10

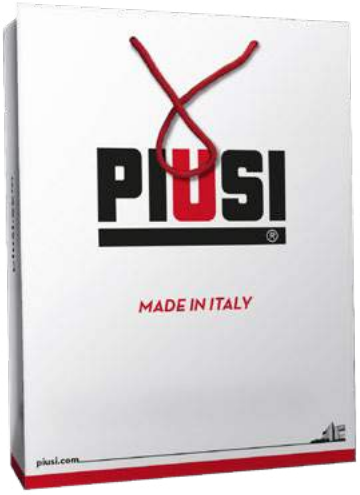

PACKAGING

CODE	DESCRIPTION	WEIGHT		PACKAGING			
		KG	LBS	MM	INCH	PCS/PALLET	PCS/BOX
CROWNER							
PBA000013	PIUSI METALLIC FLOOR STAND	76	-	120X100 (PALLET)	-	1	-
POSTER							
PBP000003	KIT POSTERS PIUSI - BOX 10 PCS	0,2	-	70X12	-	-	10
UMBRELLA							
PBG000030	PIUSI UMBRELLA - BOX 10 PCS	5,5	-	35X26X18	-	-	10
BAG							
PBG000035	PIUSI BAG 2018 - BOX 150 PCS	18,5	-	-	-	-	150
SPORTSPACK							
PBG000039	PIUSI SPORTSPACK - BOX 30 PCS	-	-	-	-	-	30
KEYRING							
PBG000041	PIUSI KEYRING -BOX 100 PCS	-	-	-	-	-	100

FLUIDS VISCOSITY

USABLE VISCOSITY CHART (units: cSt = mm²/s)

TYPE OF OIL	- 15°C	- 10°C	- 5°C	0°C	+ 5°C	+ 10°C	+ 15°C	+ 20°C	+ 25°C	+ 30°C	+ 35°C	+ 40°C
60 SPINDLE OIL	380	220	130	87	60	40	30	22	17	13		
90 REFRIGERATOR OIL	430	270	280	122	90	65	48	36	28	23		
150 REFRIGERATOR OIL	900	550	330	240	160	110	80	60	46	36		
90 TURBINE OIL	1.100	700	440	290	200	140	100	75	63	40		
150 SPINDLE OIL	2.000	1.000	600	360	230	150	100	75	55	46		
SAE - 10 W	1.150	700	460	300	220	150	110	85	65	36		
ISO 32 AUT. MACHINES OIL	1.800	1.000	600	400	260	180	125	90	70	53		
120 MACHINE OIL	3.000	1.600	1.000	620	400	265	180	130	95	75		
300 REFRIGERATOR OIL	3.300	1.800	1.000	700	420	280	190	130	95	75		
140 TURBINE OIL	3.500	2.000	1.200	750	500	320	240	170	120	95		
SAE - 20	3.500	2.000	1.200	800	530	370	260	190	140	105		
160 MACHINE OIL	4.300	2.500	1.400	900	600	400	285	190	140	105		
ISO 68 LUBRICANT	5.000	2.800	1.700	1.100	650	400	300	210	150	130		
180 TURBINE OIL	5.000	3.000	1.800	1.050	700	460	320	220	160	120		
200 TURBINE OIL	6.500	3.800	2.200	1.300	800	550	360	260	180	135		
SAE - 80 GEAR OIL	7.000	4.000	2.400	1.400	900	600	400	280	200	150		
SAE - 30	9.000	5.000	3.000	1.800	1.150	750	500	340	240	180		
ISO - 100	11.000	5.500	3.200	2.000	1.200	800	500	350	250	180		
SAE - 40		8.000	4.500	2.700	1.600	1.050	720	500	340	250		
ISO - 150	18.000	10.000	5.500	3.200	2.000	1.250	800	550	380	280		
SAE - 90 GEAR OIL			7.000	4.200	2.500	1.800	1.000	700	480	340		
SAE - 50			8.000	5.000	3.000	1.800	1.200	800	530	380		
ISO - 220			10.000	5.500	3.200	2.200	1.300	900	600	420		
SAE - 60				9.000	5.500	3.400	2.000	1.350	900	650		
ISO - 320			17.000	9.500	5.500	3.300	2.100	1.400	900	650		
SAE - 140 GEAR OIL				10.000	6.000	3.800	2.300	1.400	1.000	700		
ISO - 460				14.000	8.000	4.800	3.000	1.900	1.100	900	620	460
ISO - 680					14.000	8.000	5.000	3.000	2.100	1.400	950	680
ISO - 1000						14.000	8.000	5.000	3.100	2.100	1.500	1.000
ISO - 1500							14.000	8.000	5.000	3.100	2.200	1.500

= VISCOMAT 70
VISCOMAT 90
VISCOMAT DC 60/2
PIUSI P 3.5

+ = PIUSI P 5.5

+ + = VISCOMAT 200/2
VISCOMAT 230/3
VISCOMAT 350/2
VISCOMAT DC 60/1
VISCOMAT DC 120/1

TYPE OF FLUIDS

AIR	A
ANTIFREEZE	A
AdBlue® (UREA)	Ad
BIODIESEL	B
DIESEL	D
FOOD	F
GASOLINE	G
GREASE	RG
KEROSENE	K
OIL	O
WATER	W
WINDSCREEN	WS

The intellectual property of this catalogue is assigned to all countries. Translation, reproduction, electronic storage and full or partial adaption by any means (including micofilms and photocopies) of its contents, without prior written authorisation from PIUSI S.p.a., entails a violation of PIUSI S.P.A's copyrights and constitutes an act of unfair competition. The products shown in the images of this catalogue are protected according to the regulation in force regarding industrial property. The information contained in this catalogue is as accurate as possible and complies, as far as possible, with existing regulations at the time of its publication. We therefore reserve the right to make subsequent modifications in line with modifications to regulations and/ or in relation to any production requirements that are deemed necessary for safety reasons. The technical specifications indicated in this catalogue cancel out and replace those already present in the previous general catalogue and in the product catalogues. The updates and product data sheets are available in PDF format on our website:
www.piusi.com

CERTIFIED
ISO 9001 / ISO 14001

SINCE 1953, PIUSI HAS BEEN EMPLOYING ITALIAN ENGINEERING SKILLS AT THE SERVICE OF ITS CUSTOMERS, WITH PROFESSIONALISM AND INTEGRITY IN ORDER TO BUILD STABLE AND LASTING RELATIONSHIPS.

OUR MISSION IS TO PROVIDE SIMPLE, INTELLIGENT AND PROFESSIONAL SOLUTIONS FOR THE TRANSFER, DISPENSE AND MEASUREMENT OF LUBRICANTS, FUELS AND LIQUIDS, WITH THE HIGHEST CONSIDERATION FOR HUMAN AND ENVIRONMENTAL HEALTH.

PIUSI S.p.A.
Headquarters
46029 Suzzara (Mantova) Italy
tel.+39 0376 534561
fax.+39 0376 536393
e-mail: piusi@piusi.com
www.piusi.com

PIUSI USA, Inc.
3901 Anglers Avenue
Fort Lauderdale, FL 33312
tel.: 954 584 1552
fax.: 954 584 1554
Email: piusiusa@piusiusa.com
www.piusiusa.com

Copyright PIUSI s.p.a. - Bulletin C0360 EN - 06.20

TECHNICAL DATA IN THE CATALOGUE ARE NOT BINDING. THE COMPANY RESERVES THE RIGHT TO MODIFY THE INFORMATION CONTAINED IN THIS CATALOGUE WITHOUT ANY PRIOR NOTICE.